ECOVOLVE

Battery Hi-Tip Dumpers

ED800 **ED1000** **ED1500**

OWNER'S MANUAL

CONTENTS

CONTENTS

CONTENTS

1

INTRODUCTION

Your high tip electric dumper

Your electric high tip dumper offers premium economic efficiency, safety and driving comfort. It is primarily down to you to maintain these characteristics over time and take advantage of the resulting benefits.

During manufacture:

- All safety requirements of the relevant EC directives were observed.
- All conformity assessment procedures stipulated in the applicable directives were carried out.

This is attested by the CE mark shown on the Identification plate.

The operating instructions contain everything you need to know commissioning, driving and maintenance. Observe the operating instructions for the electric dumper in question.

Carry out the specified work regularly, at the due times and using the consumables envisaged for this purpose in accordance with the inspection and maintenance overview.

Servicing work not described here will require specialist knowledge, measuring devices and specialist tools. Contact the service partner for more information.

Servicing should only be carried out by qualified personnel approved by the manufacturer (specialists).

This material is proprietary to Ecovolve, and is not to be reproduced, used, or disclosed except in accordance with written authorisation from Ecovolve.

Each new user must read the Operator's Hand Book before operating any Ecovolve truck for the first time.

This manual differs from the Operator's Hand Book which provides comprehensive instructions of how to operate any dumper manufactured by Ecovolve. The Operator's Hand Book must be kept in the trucks manual holder at all times. A copy of this manual is included within this document or can be downloaded at www.ecopvolve.ie.

All maintenance personnel should read and understand the instructions in this service manual before performing maintenance and/or operational checks on the machine. All safety notices, warnings and cautions must be understood and followed when accomplishing repairs on the electric dumper.

Owners manual

This manuals contains, among other things, information on the intended operation of the dumper and instructions of how to operate, maintain, and inspect the truck safely. The troubleshooting section of this manual has additional instruction for safely diagnosing malfunctions of the electric dumper to maintain service and performance levels.

Information about this service manual including the specifications, illustrations, weight information and technical data are not binding and correspond to the design at the time of creation. Ecovolve reserve the right to make changes without prior notice in the area of design, configuration, appearance and technology on account of the ongoing further development of the products.

Always strictly observe the safety instructions in this service manual, the operator's manual and the legal and trade association regulations at the usage location.

Despite the utmost care, we cannot rule out deviations from drawings or dimensions, computing errors, printing errors or incompleteness in this operator's manual. Therefore, we make no guarantee for the correctness and completeness of our statements in this Owners Manual.

We guarantee the faultless functionality of our products within the context of normal operating conditions.

However, no manual can address every possible risk. The end-user ultimately must apply sound judgment whenever using this product. It is up to you, the operator, to take good care when working thedumper and use it to its full potential. During the manufacturing process (if affixed with CE mark): Ecovolve adhered to all CE safety requirements. We carried out all compliance tests required by law. This is proven by the CE stamp shown on the identification plates. The manual provides you with important information on activating, driving, operating and maintaining an Ecovolve product.

It is essential you regularly complete the maintenance checklists and make sure it is done on time. Use the correct tools, products etc. specified in order to maintain valid warranty service for your electric dumper.

Please keep and save a complete, detailed record of the maintenance process. All maintenance procedures must be recorded; otherwise you will limit or void your warranty. Users, especially dumper operators and maintenance personnel, must strictly adhere to regional and international safety regulations such as "Guidelines on correct and safe use of material handling equipment".

User shall be responsible for any loss caused by improper use. Ecovolve Ltd will not be responsible for such loss. If you want to use an Ecovolve product for purposes that are not mentioned in the user manual, please contact a distributor accredited by Ecovolve Ltd. Any modification of your dumper, in particular fitting of equipment or conversion of the dumper, is prohibited without the permission of the manufacturer.

Warranty and liability

To maximize your warranty, after each periodic inspection, proof must be submitted to Ecovolve by way of electronic submission on our website. This is the only way to prove an effective service has been completed by a competent and qualified person as per instructions in this service manual.

Werrenty submission forms can be downloaded from our website. If you have any questions regarding your warranty please contact your local distributor. A copy of each periodic inspection form can also be found at the end of this manual. Please keep and save a detailed record of the maintenance process. All maintenance procedures must be recorded, otherwise you will limit or lose your warranty.

Users, especially the truck operators and maintenance personnel, must strictly adhere to regional and international safety regulations including "Guidelines on correct and safe use of materials handling equipment". (Overseas edition). User shall be responsible for any loss caused by improper use. Ecovolve Ltd will not be responsible for such loss. If you want to use an Ecovolve product for purposes that are not mentioned in the user manual, please contact dealers accredited by Ecovolve Ltd. Any modification of your machine, in particular fitting of equipment or conversion of the truck, is prohibited without the permission of the manufacturer.

Maintenance

Do not make repairs yourself. Servicing should ony be carried out by competent personnel. Service technicians are trained professionals and must be competent to carry out the periodic maintenance required to keep the Ecovolve range operating at peak performance and also to maximize your warranty.

Inspections and periodic service is vital to the safe operation of the truck. Adhere to a strict inspection, lubrication and maintenance schedule. Only use original approved spare replacement parts when carrying out repair work.

Keep the maintenance and service area clean, free from obstacles and anything which may cause personal injury. Never wear loose objects or jewellery when servicing the truck. Never attempt to weld or attach fittings to the dumper. This should only be completed by suitable personnel from Ecovolve. Never attempt to alter the the dumper in any way, especially to drill any holes on any locations on the machine.

Any modification should only be completed by suitable personnel after consultation and authorisation from the design team. To comply with warranty conditions, please ensure that work carried out is recorded in the registration documents. Record and submit all necessary proof of scheduled service to Ecovolve. Use dedicated work supplies according to checking and maintenance overviews.

Replacement parts

The Ecovolve range has been designed to be extremely low maintenance. Therefore ordering spare parts is much less frequent than of traditional trucks. For questions about the Truck and orders for spare parts, please contact your local Ecovolve distributor.

If the need to order spare parts arises, please provide the following information in addition to the part numbers:

- Model number
- Serial number/Year of manufacturing
- Delivery date

Intended use

All Ecovolve electric dumpers have been built according to applicable standards and regulations. Operationby inexperienced persons or in an unintended manner can result in hazards that can lead to personal risk and subsequent harm to the operator and persons in the operating area of the electric dumper. Improper use can damage the machine as well as property in the vicinity of operation. The electric dumper is designed to work in confined spaces such as narrow corridors and basements. It sits on a unique shaped chassis which allows it to turn on its own axis. It is therefore far more maneuverable than a conventional dump truck.

The Ecovolve Range are intended to transport and empty materials within the specified load capacity in normal operating conditions. It is the operators responsibility to use sound judgment to assess whether a ground material is compatible with use of the Truck. If in doubt contact your nearest distributor. Unintended use can endanger the lives of operating personnel or other persons and cause injuries or extensive damage to the truck.

The rules for the normal and proper use of industrial trucks must be followed under all circumstances by the responsible persons, in particular by the operators and service personnel.

Failure to read and understand the entire manual before using or servicing the product constitutes misuse. Always follow the warnings contained within this guide and on the Truck to avoid incidents and accidents from occurring.

2

SAFETY

Safety guidelines

Ecovolve strives to identify foreseeable hazards associated with the use of it's products. However, no manual can address every possible risk. The possibility of other dangers when using the truck cannot be entirely excluded. The end-user ultimately must apply sound judgment whenever using the electric truck. Improper or careless use might result in serious personal injuries or death. Below is an overview of steps, warnings and advice that can be taken to prevent and minimize the risk of injury. This list is not exhaustive and awareness to each local environment and situation must be exercised by the operator.

Failure to read and understand the entire manual before using or servicing the product constitutes misuse. Always follow the warnings contained within this guide and on the Truck to avoid incidents and accidents from occurring.

Safety Features

Ecovolve has introduced many safety features to make the Ecovolve range safe and user friendly. An overview of these are as follows:

- Three operating speeds: Creeper for when the skip is raised (under 1 km), Walking (under 4km), and Full (7km). The Truck automatically selects Creeper mode when the hi tip function is activated, . It will automatically select the Walking mode when the step is in the raised position. The operator can manually select the slower speed at any time if necessary.
- The Truck has two pull-up safety rails for extra stability for the operator. These must be used when the operator is using the operators platform.
- The Truck is fitted with standard features such as a beacon light, motion buzzer and LED lamps allowing for high visibility at all times.

- The operator Must use both hands on the tiller head when operating the Truck.
- The Truck is fitted with both dynamic and static brakes. When the Truck is in reverse, if the operator collides with an object, Their body will engage the large red EMR body protection switch which will stop the truck and move the truck forward.
- The Truck has an emergency stop button which can be easily accessed at any time during operation by pushing down on the button.
- If the Truck is switched on and unattended for a period of longer than nine minutes, as a safety precaution the machine will automatically switch all power off.

The operator must always be aware of their surroundings and maintain vigilance for their safety and the safety of others.

Operating Instructions

All operators must read and understand the operating instructions before operating the truck. A copy of the Operators Manual should be kept in the manual holder on the Truck at all times. A copy of this manual can be found in this document – Section 2. Before carrying out any work, the operator should find a remote site to become familiar with the controls and machine response. The truck shall be in serviceable condition before attempting to use it as described in the operating instructions. If the truck is determined not to be in serviceable condition, notify the site or machine supervisor to have it repaired before use.

Damage and Defects

- Damages and other defects to the truck must be reported to the Supervisor immediately. Trucks which are not safe to operate may not be used until they have been properly repaired.
- Safety installations and switches may not be removed or rendered unusable.
- Specified settings may only be changed with the approval of the manufacturer.

Danger Area

- People must not stand in the danger area of an industrial truck. Danger areas are those areas in which persons are in danger as a result of the movements of machines, their operating equipment, their load carrying devices (e.g. their attachments) or the loaded goods. This also includes the area which can be reached by falling goods or lowering or falling operating equipment and devices.

Driving Conditions

- Use lights in dark and dim areas. Always ensure that there are no pedestrians in the trucks rear swing area before turning.
- Under all travel conditions, operate the truck at a speed that will permit it to be brought to a stop in a safe manner.
- It is essential to keep your truck under control at all times.

Load

- Do not exceed the capacity of the dumper. The capacity appears on the trucks identification plate and the safety labels on skip.
- Do not overfill the skip to impair the operators vision.
- Always make certain that the load is secured and arranged evenly in the skip.
- Do not allow people to ride on the dumper. Do not raise the skip over people. Never lift or lower the load when the truck is in motion.
  Unstable loads are a hazard to you and to your fellow workers.

Driving Routes and Tip Over

Stability is guaranteed if the electric dumper is used correctly according to specified targets.

- Driving routes shall be free of objects.
- Gradients used by the truck cannot exceed a max of 10˚.
- Drivable uphill/downhill gradient cannot exceed a max of 15˚.

Common reasons for a lack of stability are:

- Cornering at excessive speeds.
- Moving with the load raised.
- Moving with a load that is protruding to the side.
- Turning and driving diagonally across gradients.
- Driving on gradients with the load on the downhill side.
- Ramp edges or steps.

Tip over can occur with a combination of speed and sharpness of turn. This condition of instability is even more likely with an unloaded skip.

- Lateral tip over can occur loaded or unloaded by turning on a ramp.
- Longitudinal tip over can occur with a combination of overloading and load elevated.

Modification

Do not modify the truck!

Modifications automatically void the limited warranty and might make the truck unsafe to use. Check with the manufacturer or regional distributor for use of approved attachments.

Chassis Safety

- Inspect the product as described in the maintenance schedule. Do not use the truck unless it is in normal conditions.
- Do not use the product until it is fully restored to normal condition.
- Only use manufacturer-approved replacement parts.
- Do not remove or obscure any label. All labels must be readable and undamaged.

  Inform all persons in the area that you are going to use the truck and instruct them to take the necessary precautions about the truck during operation.
- Clear all debris from your driving path.

OPERATORS PERSONAL PROTECTIVE EQUIPMENT (PPE)

	**HARD HAT REQUIRED** When the instruction for a hard hat is stated, a hard hat must always be worn when operating the machine to avoid personal injury.
	**PROTECTIVE EYEWEAR REQUIRED** When the instruction for protective eyewear is stated, protective eyewear must always be worn when operating the machine to avoid personal injury.
	**SAFETY SHOES REQUIRED** When the instruction for safety shoes is stated, safety shoes must always be worn when operating the machine to avoid personal injury.
	**APPROPRIATE CLOTHING REQUIRED** When the instruction for safety clothing is stated, safety clothing must always be worn when operating the machine to avoid personal injury.
	**HAND PROTECTION REQUIRED** When the instruction for hand protection is required to avoid personal injury.

SAFETY SYMBOL EXPLANATION

	**CAUTION!** Indicates a hazardous situation which, if not avoided, could result in moderate injury.
	**ELECTRICAL WARNING!** Indicates a hazardous situation which, if not avoided, could result in death or serious injury.
	**CRUSH PARTS WARNING!** Indicates a hazardous situation which, if not avoided, could result in death or serious injury.
	**WHEEL CRUSH WARNING!** Indicates a hazardous situation which, if not avoided, could result in serious injury.
	**NO NAKED FLAME!** Indicates if naked flames are used in situations where naked flames are prohibited, a serious accident can occur.
	**NO SMOKING!** Indicates if smoking occurs where a restriction is in place, a serious accident can occur.
	**ADVISORY TEXT WARNING!** Indicates that the following text advice must be adhered to.
	**REVERSE HAZARD WARNING!** Indicates a hazard is present to the operator and pedestrians while reversing. Extra attention is required.

SAFETY SYMBOL EXPLANATION

A	**DANGER!**	The operator must read and fully understand the owners manual including all warning signs and labels before use.
B	**DANGER!**	Operator must wear the correct Personal Protective Equipment (PPE) to ensure safe use.
C	**DANGER!**	Crush hazard. Can cause serious injury or death. Keep clear.
D	**DANGER!**	Do not drive on incline with the skip raised. High risk of tip over causing injury.
E	**DANGER!**	Do not enter the turning circle of the machine at all times.
F	**DANGER!**	Do not raise the skip while moving. Risk of tipping over causing injury or death.
G	**WARNING!**	Indicate change of direction on turning.
H	**DANGER!**	Crush hazard. Can cause serious injury or death. Avoid moving mechanisms.
I	**DANGER!**	Crush hazard. Can cause serious injury or death. Keep out of the danger zone while loading.
J	**DANGER!**	Do not exceed the max load rating.
K	**DANGER!**	Do not empty skip on decline. High risk of tipping over causing injury or death.
L	**DANGER!**	Risk of overturning. Max permissible gradient is 10 degrees.
M	**DANGER!**	Driveable uphill max permissible gradient is 15 degrees.
N	**DANGER!**	Indicate change of direction on turning.

3

OVERVIEW

Identification plate

NOTE

The **CE** mark confirms compliance with the EC machinery directives and with all regulations applicable to the Ecovolve hi tip electric dumper.

Identification pate

1 Nameplate

2 Manufacturer

3 Model number

4 Serial no/year of manufacture

5 Unladen weight

6 Laden weight

7 CE mark

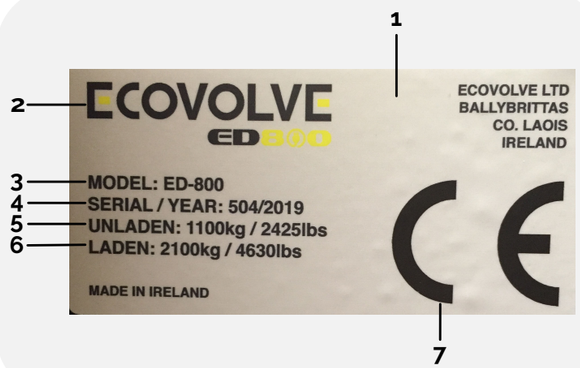

Operators platform and safety rails

⚠ CAUTION

The following section is a brief overview of the operators platform and safety rails.
All operators must read and fully understand the operating instructions in section 4 of this manual before operating the truck.

Operators platform and safety rails overview

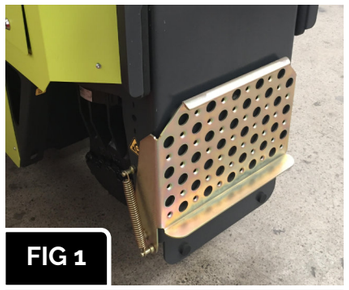

FIG 1

The platform in the raised position.

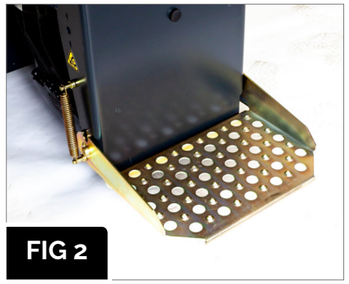

FIG 2

The platform in the lowered position

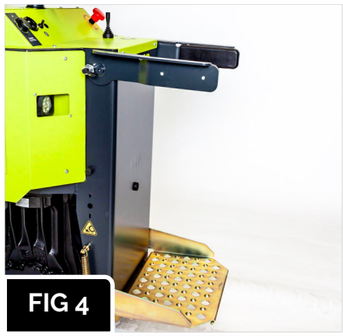

FIG 4

The safety rail locked in the raised position.

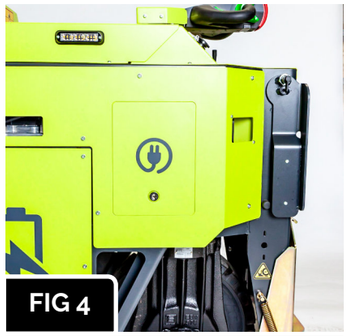

FIG 4

The safety rail in the lowered position.

⚠ DANGER

When operating the truck in walking mode the operators platform must be in the raised position (fig 1)
When operating the truck in walking mode the safety rails must be in the lowered position (fig 1)

Controls

⚠ CAUTION

The following section is a brief overview of the dashboard controls. All operators must read and understand the operating instructions in section 4 of this manual before operating the truck.

Dashboard controls overview

FIG 1

Key switch

To start the Truck, make sure the Emergency stop is raised up, turn the key clockwise to position II and hold for 3 seconds to start the Truck.

FIG 2

Emergency stop button

Press the Emergency stop button to immediately interrupt all powered functions. Use the Emergency stop function if the control, driving or skip functions do not respond normally to operator commands.

Use the Emergency stop as a service brake to secure the Truck when parked. To operate, the emergency stop button must be pulled up to the ON position before turning the key.

If the emergency stop button is NOT in the ON position electrical power will not be transmitted to the Truck and the machine will fail to start.

FIG 3

Multi function display

Displays battery discharge (BDI), hour meter, trac hour and error messages.

Error codes and troubleshooting can be found in the troubleshooting section of the Owners Manual.

⚠ CAUTION

The following section is a brief overview of the dashboard controls. All operators must read and understand the operating instructions in section 4 of this manual before operating the truck.

Dashboard controls overview

FIG 4

Light switch

Up = On | Down = Off

Remote control (Specific models only)

For applicable models, a switch to engage the the remote control functions will be situated beside the light switch on the dash (fig 4).
To use a remote control to operate the electric dumper:
Down = Remote mode On
UP = Standard tiller
operation.

FIG 5

Hi tip function skip lever

The skip lever has four positions.

1. Pull lever back to raise the skip
2. Push lever forward to lower the skip
3. Push lever to the right to tilt the skip
4. Push lever to the left to tilt back the skip

3. OVERVIEW
Controls

⚠ CAUTION

The following section is a brief overview of the tiller head controls. All operators must read and understand the operating instructions in section 4 of this manual before operating the truck.

Tiller head controls overview

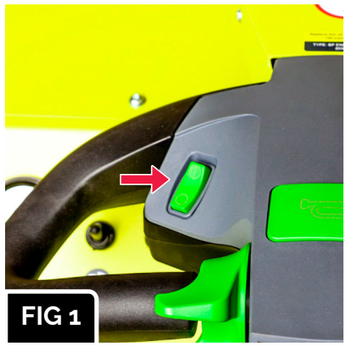

FIG 1

Flashing Beacon & Motion Buzzer
ON/OFF Switch.

FIG 2

Horn Switch:
Pressed IN will sound horn.

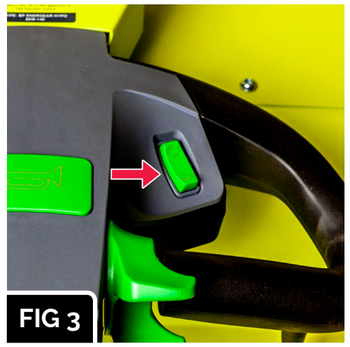

FIG 3

Speed Switch.
Two options SLOW and FAST.

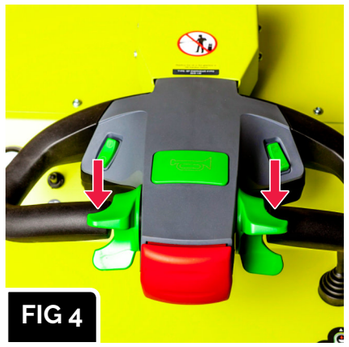

FIG 4

Traction paddles are used to drive the truck.
UP =Forward
DOWN = Reverse.

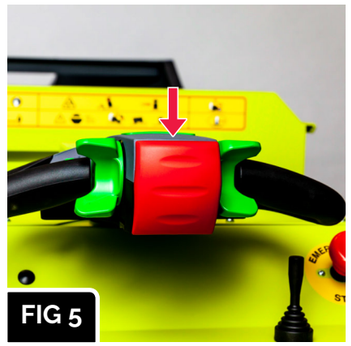

FIG 5

EMR Reverse Protection Switch. Protects the operator from colliding with objects when reversing the truck.

FIG 6

When the truck is in reverse and the EMR is engaged, the truck will STOP and automatically move forward.

4

OPERATION

Electric hi tip dumper important information

All electric products from Ecovolve are very user friendly machines to drive and operate. They are carefully manufactured with high quality components which ensure a long trouble free life. Whilst being designed, many safety features were considered and built in as standard to protect the operator and fellow work colleagues.

Before operating the electric dumper it is essential that the operator has:

- Read the operators handbook..
- Understands what safety featurs are present in the elecctric dumper.
- Read the owners manual.
- Understands all operational functions and safety symbols present on the machine.
- The truck has three operating speeds: Creeper for when the skip is raised (under 1 kph), Walking (under 4 kph), and Full (7 kph). The Truck automatically selects Creeper mode when the skip is in operation. It will automatically select the Walking mode when the step is in the raised position. The operator can manually select the slower speed at any time if necessary.
- The truck has two pull-up safety rails for extra stability for the operator. These must be used when the operator is using the operators platform.
- The operator must use both hands on the tiller head when operating the truck.
- The truck is fitted as standard with a flashing beacon, motion buzzer and LED lamps allowing for high visibility at all times when in operation.
- The truck is fitted with both dynamic and static brakes. When the truck is in reverse, if the operator collides with an object, their body will engage the large red body protection switch which will stop the truck and move the truck forward. The truck must only be maneuvered in reverse and not driven for any distance.
- When the battery is low, the truck will automatically override the speed switch setting and default to LIMP mode. The operator MUST navigate the truck to the nearest power point and recharge the battery fully before continuing with work duties.

Driving and operation

Switching the dumper on and off

⚠ WARNING

Risk of accident and injury as a result of the driver being distracted. The use of mobile phones or other electrical equipment is prohibited while the truck is in motion.
It is not permitted to drive on long inclines greater than 15˚.
You must adapt your driving style to the route conditions, and in particular to hazardous work areas and the load.

Switching on the dumper

- Ensure the tiller head is in the central position (fig 1), disengage the emergency stop button.
- Insert the key into the key switch (fig 2) and turn clockwise from the zero position to position "II" and hold for 3 seconds. The traction wheel will reset.
- The display unit (fig 3) will display the following 2 actions in 2 second intervals:
  TOTAL HOUR - *Total hours refers to the total number of recorded hours that the machine is powered on.*
  TRAC HOUR - *Traction hours refers to the total number of recorded hours of the physical opertation of the machine.*
  Following the first two actions the display reverts to the battery discharge indicator(BDI).
- The electrical system is switched on and the truck is ready for operation.


FIG 1

FIG 2

FIG 3

Switching off the dumper

- Ensure the truck is at a complete stop.
- Turn the key anticlockwise to the zero position.
- Engage the emergency stop button.
  The electrical system is switched off and the parking brake is applied.

Operators platform

- The truck has a two position platform for the operator to stand on when operating the truck.
- In the lowered position the truck can be operated while standing on the platform (fig 1). Never walk behind the machine when the operators platform is in the lowered position (fig 1).
- In the raised position the operator can walk behind the truck (fig 2).
  The truck will default to walk mode speed when the platform is placed in the raised position.
- When operating the truck in walking mode the platform must be in the raised position (fig 2)

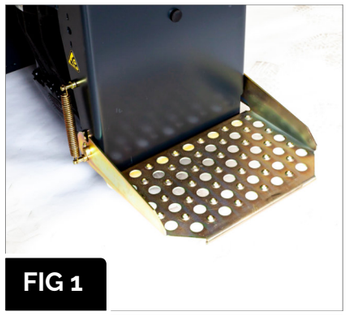
FIG 1
The platform in the lowered position.

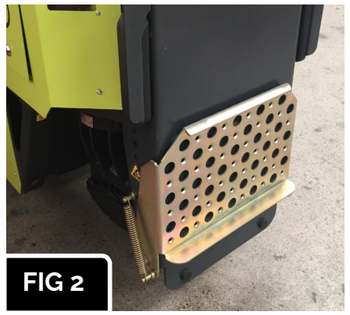
FIG 2
The platform in the raised position.

Operators safety rails

- Every truck is equipped with foldaway safety rails for the protection of the operator.
- Ensure that the safety rails are locked in the up position when using the operators platform.
- To lock the safety rails in place, raise the safety rails up and turn the lock to secure them (fig 3).
- When operating the truck in walking mode the rails must be in the lowered position (fig 4)


FIG 3
The safety rail locked in the raised position.


FIG 4
The safety rail in the lowered position.

Forwards travel

- Pull out the emergency stop button, insert the key and start the truck.
- For forward motion the traction paddles are pressed upwards and for reverse motion the traction paddles are pressed downwards (Fig 1).
- The speed of the truck depends on the set position of the speed control switch (fig 2) and also if the operators platform is in use.
- Carefully press the traction paddle up to drive in a forward motion. The driving speed increases as the actuation distance of the traction paddle increases.
- Carefully release the traction paddle to slow the truck down. The driving speed decreases as the actuation distance of the traction paddle decreases.
- When the traction paddle is released the truck will slow down to a standstill and the brake will be applied.

Traction paddles.
UP =Forward
DOWN = Reverse.

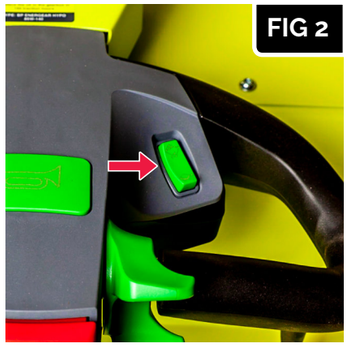

Speed Switch.
Two options SLOW and FAST.

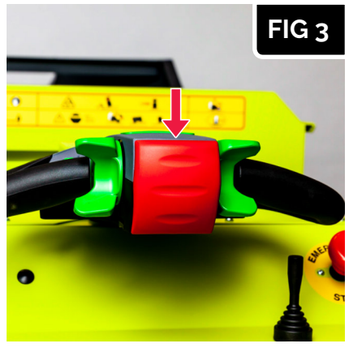

EMR Reverse Protection Switch: When ACTIVATED, will STOP the truck and move forward.

Reverse travel

- Carefully press the traction paddle down to drive in a reverse motion. The driving speed increases as the actuation distance of the traction paddle increases.
- Carefully release the traction paddle to slow the truck down. The driving speed decreases as the actuation distance of the traction paddle decreases.
- When the traction paddle is released the truck will slow down to a standstill and the brake will be applied.
- As a safety feature, if the truck is operated in reverse and the operator collides with an object, their body will engage the large red EMR reverse protection switch (fig 3). This will automatically stop and safely move the truck forward.

Operating speeds

The dumper has three operating speeds.

- Creeper mode under 1 kph: The truck automatically selects creeper mode when the high tip function is activated.
- Walking mode under 4 kph: The truck will automatically select walking mode when the operators platform is in the raised position.
- Full mode 7 kph: The dumper automatically selects full mode when the operators platform is in the down position.
- The operator can manually select the slower speed using the speed switch located on the tiller head.

Steering system

- The tiller head is used to steer the truck, the driver must use both hands on the tiller head while operating the truck.
- As a safety measure, when the steering is engaged while the truck is in motion the speed of the machine will automatically reduce to a safe turning speed relative to the turning angle.

⚠ DANGER

The truck must not be used under any circumstance if the steering system is defective.

Braking system

- The truck is fitted with both dynamic and negative brakes.
- The dynamic braking system in engaged when when the traction paddles on the tiller are released back to neutral, slowing the truck down to a standstill.
- When the truck is at a complete stop the negative parking brake is engaged. The brake is automatically released when the traction paddles are actuated to a forward or reverse motion.
- The service brake is used to secure the truck when parked and not in use. It is activated by pressing down on the emergency stop button.

⚠ DANGER

The truck must not be used under any circumstance if the brake system is faulty.

Lights

- The truck is equipped with both front and rear facing lights (fig 1 and fig 2).
  The lights can be turned on and off using the switch on the dash (fig 3).

FIG 1

The front facing lights

FIG 2

The rear facing lights

FIG 3

The location of the light switch on the dash board.

Beacon

- For safety purposes the truck is equipped with a flashing beacon (fig 4) and motion buzzer.
- This can be activated using the switch on the left hand side of the tiller head (fig 5).

Horn

- The horn is used as a warning signal, for instance at junctions and blindspots.
- The horn is situated on the top center of the tiller head. (Fig 6).

FIG 4

The location of the flashing beacon light, one on each side of the machine.

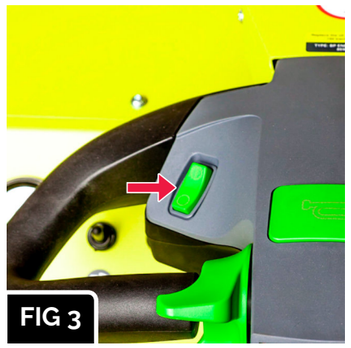

FIG 3

The location of the flashing beacon and motion buzzer switch on the tiller head.

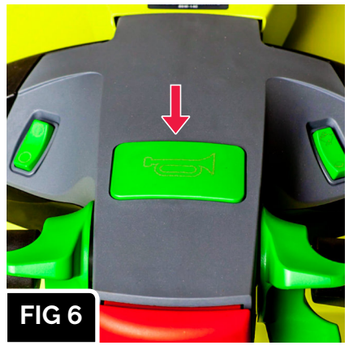

FIG 6

The location of the horn on the tiller head.

Hi tip skip operation

DANGER

CRUSH PARTS There is a risk of becoming trapped between moving parts due to the skip lifting arm. Therefore, never reach into area around the skip lifting arm and the dumper.
Take note of the maximum lift height.

Operating the hi tip skip functions

The skip is equipped with a function that is capable of tipping the load at a height. To see the height capability of each truck model, please refer to the tech sheet in section 6 for Details. The skip lever operates all the functions of the skip.

The skip lever is located on the dashboard and has four positions (fig 1).

- Tilting the skip **forward**: Push the lever to the **right** to tilt the skip forward (fig 2).
- Tilting the skip **forward**: Push the lever to the **left** to tilt back the skip.
- **Raise** the skip: Pull the lever back to **raise** the skip (fig 3).
- **Lower** the skip: Push the lever **forward** to lower the skip.

FIG 1

FIG 2

FIG 3

DANGER

LOAD
Do not exceed the load capacity of the truck.
The capacity appears on the trucks identification plate and the safety labels on skip.
Do not overfill the skip to impair the operators vision.
Never lift or lower the load when the truck is in motion.

Parking the truck

- In the interest of safety, parking the truck is the operators responsibility.
- The operator must ensure to park the truck in a safe and secure manner and not be in obstruction of other traffic and people.
- For safety reasons the Emergency stop button must be engaged.
- When parking, the key must be turned anticlockwise to power off the machine.
- If the truck is switched on and unattended for a period longer than nine minutes, as a safety precaution the machine will automatically switch all power off.
- If storing the truck for any period longer than 7 days, fully charge the dumper before parking and ensure the emergency stop button is pressed in. Failure to do so could result in damage to your battery.
- When the truck is parked on an incline it is recommended to use the wheel chock as an added form of stability. The wheel chock is attatched to the side of the truck as seen in (fig 1), and is placed at the rear wheel for added stability while parked on an incline.

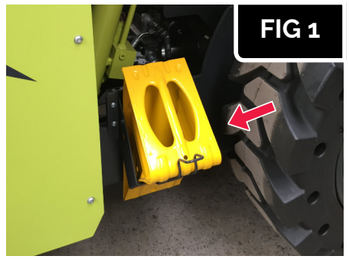
FIG 1

Operating the Emergency stop button

- Press the emergency stop button to immediately shut down all powered functions.
  Use the emergency stop button in the event of a malfunction of controls or a dangerous situation.
- The emergency stop button is situated on the dash (Fig 2).

Emergency stop button in normal operation

- Pull the actuation knob of the emergency stop button upwards.
  The emergency stop button is unlocked.
  The truck is ready for operation.
- Push the actuation knob of the emergency stop button downwards.
  The electrical system of the dumper is switched off.
  The driving, steering and lifting functions of the truck are deactivated.
  The brake remains active.
- Use the emergency stop button as a service brake to secure the truck when parked.

FIG 2

Battery

Battery discharge indicator

- The battery's discharge indicator (BDI) is the rate at which the battery discharges during the operation of the truck. The operator can check the status of the battery by viewing the multi function display. The display is located on the dashboard (fig 3).
- The battery's discharge status is shown on the display and also indicated by the row of 5 LED's underneath.
- As the battery discharges, the digital display shows the BDI status from 100% to 0%. Simultaneously the 5 LEDs go out one after the other as the battery discharges.
- When the battery is low the truck will default to limp mode.
  The operator must navigate the truck to the nearest charge point and recharge the battery fully before continuing with work duties.

BDI Percentage:

- BDI percentage 90% and above - All 5 LEDs illuminated.
- BDI percentage between 70% and 90% - First 4 LEDs illuminated.
- BDI percentage between 50% and 70% = First 3 LEDs illuminated.
- BDI percentage between 30% and 50% = first 2 LEDs illuminated.
- BDI percentage between 10% and 30% = First LED illuminated.

Battery discharged

It is recommended to recharge the battery when the residual battery capacity is reading less than 10% on the digital display.

FIG 3

Multi function display

Charging

	⚠ WARNING Never operate the truck when charging.
	⚠ WARNING The truck battery charger produces hazardous output voltages under normal operation. Exercise extreme care when working with the equipment and the battery.
	⚠ WARNING Do not open or disassemble the charger. No user-serviceable parts are contained inside the unit. Do not operate charger if the AC supply cord is damaged or if the charger has received a sharp blow, or otherwise damaged in any way – refer all repair work to qualified personnel.
	⚠ WARNING Connect charger power cord to an outlet that has been properly installed and grounded in accordance with all local codes and ordinances. A grounded outlet is required to reduce risk of electric shock – do not use ground adapters or modify plug. Do not touch the uninsulated portion of an output connector or uninsulated battery terminals. Disconnect the AC supply before making or breaking the connections to the battery.
	⚠ WARNING When charging the battery it is absolutely prohibited to smoke or use a naked flame.
	All electric trucks from Ecovolve are fitted with an internal automatic charging system. This charger has an automatic maintenance charging feature for a certain period after the mains charging period is complete. It will also eliminate the risk of overcharging the battery and the need to monitor the charging procedure.
	Ensure to switch off the truck before commencing charging.
	When connecting the charger to a 15A or 20A power outlet, the charger may draw up to a continuous 27amps at 105V AC maximum during normal operation. Supplying additional appliances from the same branch circuit may result in opening of the circuit breaker. Reduce the amount of load on the circuit, or have a larger capacity branch circuit installed.
	During charging, the surface of the charger may become warm, especially in higher ambient temperatures. This is normal. Avoid touching the surface of the charger when in operation.
	The operational life of the battery is 8 hours between charges.

Charging the battery

- The charging compartment is located at the side of truck (fig 1). The supplied 3m charging cable is stored inside the compartment.
- The charging Compartment contains the location of the mounted battery charging plug and two handheld programming device connections (labeled 1234 and 1222).
- Ensure the truck is parked safe and securely, remove the key and engage the emergency stop button prior to charging the battery.
- Use the supplied key to open the charging compartment.
- The truck is supplied with a 3m charging cable from the factory. Extension cords must be 3-wire cord no longer than 30m (100') at 10 AWG or 7.5m (25') at 16 AWG, per UL guidelines.
- When charging the battery the operator must determine what power source is being used on the work site, 110V or 220V. If in doubt ask the supervisor.
- The charging cable has a blue socket, this is to be plugged into the blue panel mounted plug in the charging compartment (fig 3) first and then the remaining plug is plugged in to the power source outlet socket.
- When the battery is fully charged, remove the power cable from the power outlet and return it to the charging compartment. Lock the charging compartment door and return the key to the ignition on the dash. Power on the truck with the key to recommence work after the charge is complete.

⚠ WARNING

Never operate the dumper while the battery is charging.

FIG 1

The location of the charging compartment on the side of the truck.

FIG 2

Match the correct voltage charger to the port

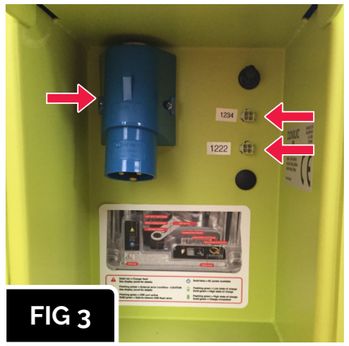

FIG 3

Battery charging plug and the location of connections 1234 and 1222

Charging QuiQ 1000 operating instructions

The QuiQ 1000 is replaced by the Delta Q IC1200 in the ED1000 models from june 2018

The charger may become hot during the charge process. Use hand protection to safely handle the charger during charging. Extension cors must be 3 - wire cord no longer than 30m (100') at 10 AWG or 7.5M (25') at 16 AGW per UL guidelines. Only connect one QuiQ charger to a single 120V AC 15A circuit, or the circuit may become overloaded. The charger will conduct a self - test after being powered on, visible by flashing all of its LEDs in sequence.

Charger 10-LED Display

Ammeter
If solid : Displays scale of output during bulk phase.
If flashing : Output has been reduced due to high internal charger temperature. Displays charge profiles 1 - 6 for 11 seconds if no battery is connected.

Bulk charge indecator
If solid : Bulk charge phase complete (80% charged) ; in absorption phase.
If flashing : Displays charger profile number if no battery is connected. Displays charge profiles 7 and above.

Charge complete indecator (Green light)
If solid : Charging complete and maintenance mode is active.
If flashing : Absorption phase complete, in finishing phase.

Ac Indicator
If solid : AC Power is present.
If flashhing : Low AC voltage. Check electrical source and the cord length.

Fault indicator (Red light)
Charger error : Refer to the troubleshooting sectrion in the manaul

Delta Q IC1200 Battery charger Replaces QuiQ1000 in ED1000 model from June 2018

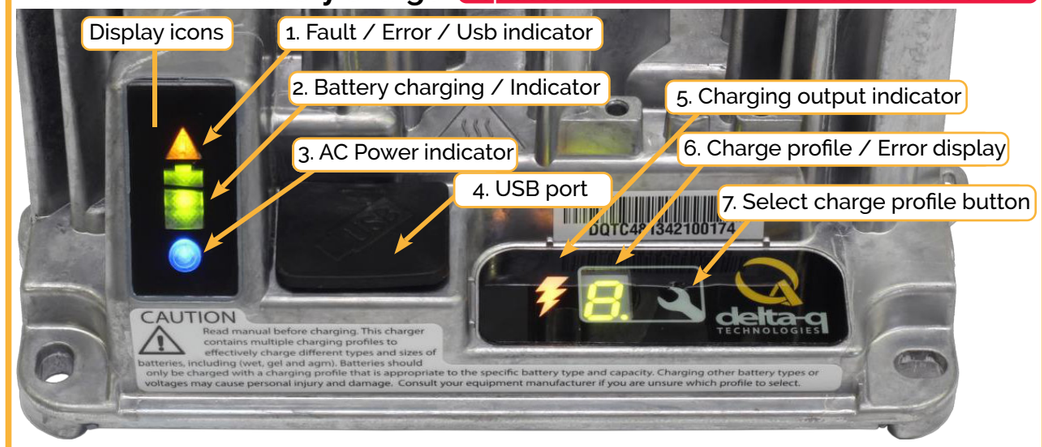

IC1200 Display icons

1. Solid red = Charger fault See (**6.**) error display panel for details	**3.** Solid blue = AC power available
1. Flashing amber = External error condition See (**6.**) error display panel for details	**2.** Flashing green = Low state of charge **2.** Solid green = High state of charge
1. Flashing green = USB port active Solid green = safe to remove USB drive	**2.** Flashing green = High state of charge **2.** Solid green = Charge complete

1. The **Fault / error /USB indicator** will display faults, errors and USB activity shown in the table above. If a fault or error is indicated check the **(6.) error display panel** for the code and find the description in the "charger error and fault codes" list below.
2. The **Battery charging indicator** has 4 states as shown in the table above.
3. The **AC power indicator** will illuminate solid blue when the charger is connected to AC power
4. The **USB Host Port** allows data to be transferred to and from the charger using a standard USB flash drive, including the downloading of charge tracking data and updating of the charger's software and / or charge profiles.
5. The **Charging Output Indicator** means that the charger output is active, and there is a potential risk of electric shock.
6. The **Charge profile / Error display panel** shows one of four possible codes to indicate different conditions:
   - 'F' codes meaning that an internal fault condition has caused charging to stop.
   - 'E' codes meaning that an external error condition has caused charging to stop.
   - 'P' code meaning that the charger programming mode is active.
   - 'USB' code meaning that the USB interface is active, the USB drive should not be removed.
   - The 'E,' 'F' and 'P' codes will appear, then are followed by three numbers and a period to indicate different conditions (e.g. E-0-0-4). See the "Charger Fault Codes" or "Charger Error Codes" in the troubleshooting section of the owners manual for details on these conditions and their solutions.
7. The **Select charge profile button** is used to select a charge profile from those stored on the charger. Up to 25 charge profiles can be stored. See the "Selecting A Charge Profile" in the charger section in the owners manual for instructions.

Transportation

The Ecovolve range are all easily transportable. It is comparatively lightweight for its capacity and can be loaded on to a vehicle with a load rating of 1300kg minimum. The operator's platform and safety rails can be folded down for ease of transportation.

WARNING When **LOADING** the Truck on a suitable transporter ensure that the following points are adhered to.

- Use suitable ramps with an adequate loading capacity.
- Clean the Truck to reduce the hazard of dirt and debris falling from the machine during transport.
- Confirm that the transport vehicle is serviceable for the transport task and that it is rated to carry a mass of 1300kg minimum.
- Move the Truck slowly and follow directions from people assisting with loading and alignment on the transport vehicle.
- Secure the Truck to the transporter using only the Trucks anchor points and wheel chock.

WARNING When **LIFTING** the truck onto a suitable transporter ensure that the following points are adhered to.

- Confirm that the lifting device has adequate lifting capacity and reach to perform the lifting operation.
- Clean the Truck to reduce the hazard of dirt and debris falling from the machine during transport.
- Use ONLY the lifting points to lift the truck onto a suitable transporter.

DANGER **CRUSH PARTS** Indicates a hazardous situation which, if not avoided, could result in death or serious injury.

Lifting and anchor points

- The truck has two lifting points and five anchor points which are used to lift and secure the machine when transporting.
- Use certified slings and chains to secure the truck when being transported.
- The assigned lifting and anchor points must be used in conjunction with approved straps or chains. The truck must be anchored at all times during transportation.

Lifting

- The two lifting points are designed so that the machine can be lifted safely on to a suitable transporter (fig 1 and fig 2).
- When using the lifting eyes it is advised to use a 'D' shackle to connect them. This gives easier and safer connection for the chain hook when lifting.

Anchor

- Five tie down points (fig 3 to fig 6) are designed to securely anchor the machine to the transport vehicle while in transit.

FIG 1
The lifting point locations are identified by this symbol.

FIG 2
The two lifting point locations on the truck.

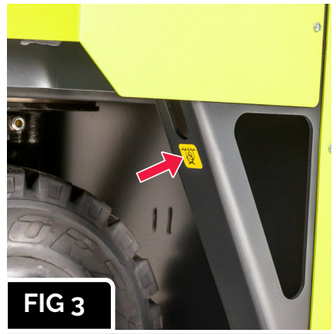

FIG 3
The anchor point locations are identified by this symbol.

FIG 4
The anchor points location on each lower side at the rear of the truck.

FIG 5
The anchor point locations on both sides of the crank.

FIG 6
The anchor points locations at the front of the vehicle.

Cleaning the electric dumper

Cleaning guidelines

⚠ CAUTION

Do not power wash the machine. Possibility of causing damage or destruction of electrical components.

The frequency of required cleaning depends on the application of the truck.
If highly abrasive materials such as cement, fertiliser, salt water etc are used, then the truck must be thoroughly cleaned after each task.

Before performing any service work on the machine ensure to clean any oil filler openings and their surroundings including all the lubricating grease points.

Cleaning

- Do not wash the machine when it is switched on .
- Cleaning materials that contain strong solvents can pemanently damage paint work and plastic panels and surfaces.
- External cleaning can be performed by compressed air followed by a wipe down with a suitable cleaning agent.
- Do not use pressurised water to clean the truck as the water may enter the electrical cabinet causing a short circuit.
- The internals of the electrical cabinet should not get dirty so there will be no reason to clean it,. Cleaning can be done during periodic maintenance.
- Remove debris build up from wheels daily.

DAILY CHECKLIST

⚠ DANGER Failure to follow the daily checklist could result in a hazardous situation which could result in serious injury and damage to the truck.

- Always carry out the daily checklist before operating the truck.
- If any item on the daily checklist fails, contact your site supervisor and DO NOT OPERATE THE TRUCK BEFORE DOING SO.

DAILY CHECKLIST	DATE	COMPLETED BY
Check the Truck for damage and all décor is visible		
Check brakes		
Check tyres & wheels		
Check hydraulic hoses and connections for leaks		
Check the joystick function		
Check speed switch function		
Check sounder plinth, horn and flashing beacon		
Check traction paddles		
Check EMR Reverse protection switch		
Check the BDI indicator for errors		
Check all lights		
Check Emergency Stop button		
Check operators platform & safety rails functions		
Check that all grease points are adequately greased		
Check the condition of the charging cable		
Notes		

5

SERVICING

50 WORKING HOUR INSPECTION

The following items must be serviced at the specified working hours. The work must be completed by a competent technician.

Failure to do this will reduce or void your warranty! The Truck has two Vehicle Identification Information items that are required and can be found on the rear drive unit and chassis as shown below (fig 1 and fig 2).

FIG 1

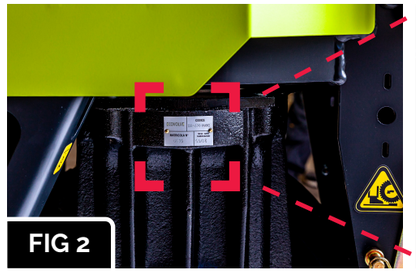
FIG 2

SERVICE ITEMS		DATE	COMPLETED BY
Chassis And Truck Frame	Check all safety symbols and décor is clearly visible		
	Check operator safety rails and platform		
Wheels	Check wheel nuts are tight		
	Check wheel bearings		
Steering & Dashboard	Check all steering functions & switches:		
	-Traction Paddles		
	-Speed Switch		
	-EMR Reverse protection switch		
	-Horn switch		
	-Safety buzzer		
	-Multi function display		
	-Skip lever functions		
	-Emergency stop button		
	-Light switches		
	-Remote control (if applicable)		

50 WORKING HOUR INSPECTION			
SERVICE ITEMS		**DATE**	**COMPLETED BY**
Steering & Dashboard	-Light display		
	-Check all sensors		
	-Test drive machine		
Lubrication	Check all 15 grease point fittings for proper lubrication, add grease as required.		
Hydraulic System	Check hydraulic system for leaks		
	Check hydraulic rams		
	Check oil level		
	Check hydraulic performance		
Rear Drive Unit	Check oil level		
Braking System	Check brake performance		
Charging	Check charging system and cable		
Safety Booklet	Check safety booklet is in a useable condition.		

VEHICLE IDENTIFICATION INFORMATION	
Model:	
Serial Number & Year:	
Rear Drive Unit Serial Number:	
Rear Drive Unit Design:	
Rear Drive unit Month And Year of Production:	
Working Hours Completed at Time of Service:	
Notes:	

Chassis and frame

Chassis And Frame	1. Check all safety symbols and décor is clearly visible. 2. Check operator safety rails and platform.
	**DANGER** **CRUSH POINT** Indicates a hazardous situation which, if not avoided, could result in death or serious injury. Obey all safety messages that follow this symbol to avoid injury or death.

1. Check all safety symbols and décor is clearly visible

- Check all safety symbols and décor is clearly visible around the skip, cabin and dashboard.
- If any damage has occurred, replace item
- Check the condition of the chassis including all panels and bodywork.
- For explanation of all symbols, please read Section 2: Safety Symbol Explanation.
- **Record Result.**.

2. Check operator safety rails and platform

- Check the condition and functions of the operator platform and safety rails in both raised and down position (fig 1 and fig 2).
- If any damage has occurred, replace item immediately.
- For explanation of all symbols, please read Section 2: Safety Symbol Explanation.
- **Record Result.**

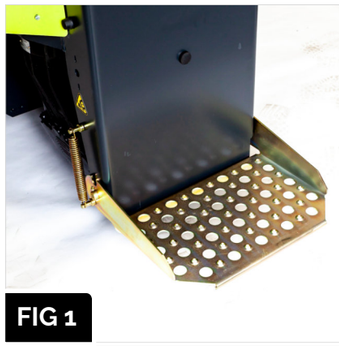

FIG 1

Check the condition of the operators platform.

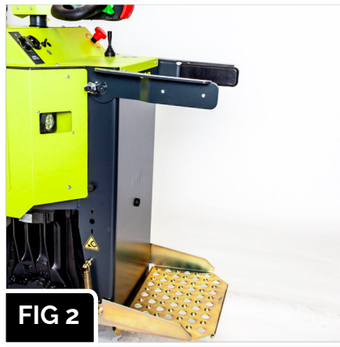

FIG 2

Check the condition of the safety rails.

Wheels

Wheels	1. Check all wheel nuts are tight. Inspect tyres for wear and damage. 2. Check wheel bearings.
	**DANGER** **WHEEL CRUSH** Indicates a hazardous situation which, if not avoided, could result in serious injury. Obey all safety messages that follow this symbol to avoid injury.

1. Check wheel nuts are tight and inspect wheels and tyres for wear and damage.

- Inspect all wheels and tyres for damage and trapped debris, remove debris if present (fig 1).
- Inspect the front and rear wheels and the 5 retaining nuts on each wheel. Check that the retaining nuts are tight.
  If required, use a torque wrench to tighten any loose retaining nut to the specified torque setting as described below.
- The tightening torque of the front wheels retaining nuts is 135 Nm (fig 2).
- The tightening torque of the rear drive unit retaining nuts is 135 Nm (fig 3).
- **Record Result.**

FIG 1 Inspect the front and rear wheels and tyres for wear and damage. Remove any debris if present

FIG 2 Check the front wheel retaining wheel nuts. If loose, tighten to the correct specified torque settings.

FIG 3 Check the rear drive unit retaining wheel nuts. If loose, tighten to the correct specified torque settings.

2. Check wheel bearings

- Inspect all wheel bearings for wear or signs of damage.
- **Record Result.**

Steering and dashboard

Steering & Dashboard	Check all steering functions and dashboard switches.
	**CAUTION** Ensure when testing the steering system that the test area is free from obstructions and pedestrians.

Check all steering functions and dashboard switches

- Ensure that all the tiller head controls are fully functional and working correctly. Follow the instructions below (fig 1 to fig 6).
- Ensure the flashing beacon, multi function display, hi tip lever function and the emergency stop button are all working correctly. Follow the instructions (fig 7 to fig 10).
- Ensure the light switch is working correctly and both the front facing and rear facing lights are fullly functional and free from debris. Follow the instructions (fig 11 to fig 13).
- If applicable, check that the remote control switch is fully functional (fig 14).
- **Record Result.**

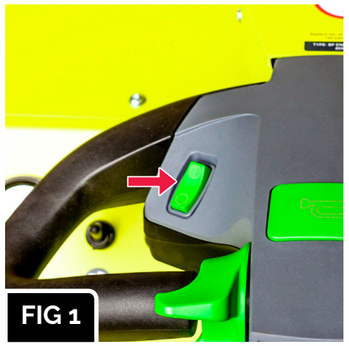

FIG 1 Press the flashing beacon & alert buzzer switch on the tiller control.

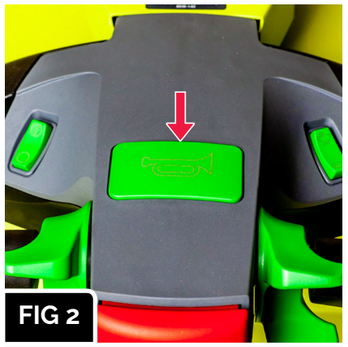

FIG 2 Horn switch. Pressed IN will sound horn.

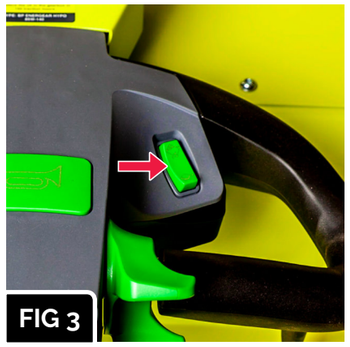

FIG 3 Check the speed Switch.Two options Low and Full.

FIG 4 Move the tiller head left and right to check the steering controls.

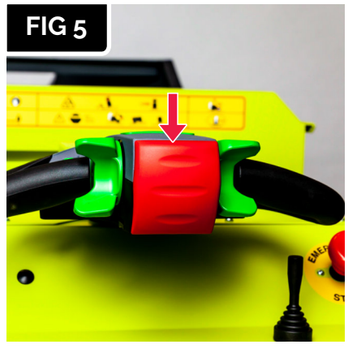

FIG 5 EMR Reverse protection Switch. Pressed IN will STOP the Truck and move forward.

FIG 6 Check the traction paddles.
UP = forward
DOWN = reverse.

Check all steering functions and dashboard switches

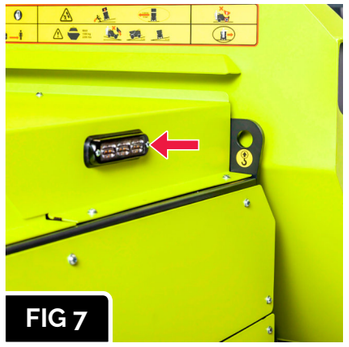

FIG 7

Ensure the flashing beacon is working correctly.

FIG 8

Multi Function Display. Ensure all functions are working correctly.

FIG 9

Skip lever. Ensure all 4 functions work correctly.

FIG 10

Check the emergency Stop button. When pressed in shuts machine down.

FIG 11

Ensure the light switch is working correctly.
If applicable check remote control switch.

FIG 12

Ensure front facing lights are functioning and free from debris.

FIG 13

Ensure rear facing lights are functioning and free from debris.

Lubrication

Lubrication	Check all 15 grease point fittings for proper lubrication, add grease as required.
	**DANGER** **CRUSH POINT** Indicates a hazardous situation which, if not avoided, could result in death or serious injury. Obey all safety messages that follow this symbol to avoid injury or death. ‣ Ensure the truck is powered off and emergency switch is pushed down and engaged before inspecting the machine. ‣ Keep a safe distance back from the machine if another technician is operating the skip function.

Check all 15 grease point fittings for proper lubrication, add grease as required

- Raise the skip to gain access to all the grease points. Turn the machine off, remove the key and engage the emergency stop button.
- Remove dust cap from grease point where caps are applied.
- If required, apply grease to each point with suitable grease using a grease gun (fig 1 to fig 8). The Ecovolve range requires just one pump of a standard grease gun.
- Clean surplus grease from point with a damp cloth and reapply dust cap.
- **Record Result.**

Grease point locations

A. Grease point 1

B. Grease point 2–3

C. Grease point 4–5

D. Grease point 6–9

E. Grease point 10–13

F. Grease point 14–15

Check all 15 grease point fittings for proper lubrication, add grease as required

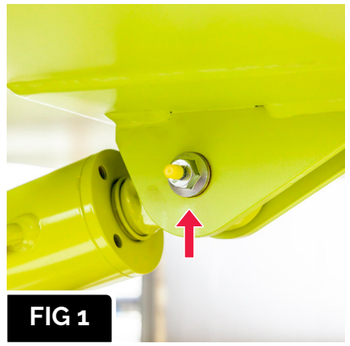

Grease point 1

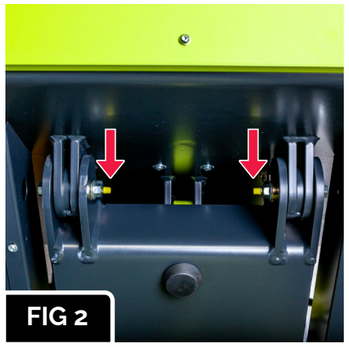

Grease point 2-3

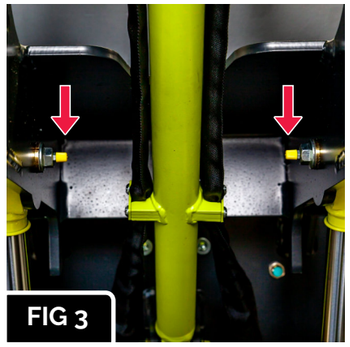

Grease point 4-5

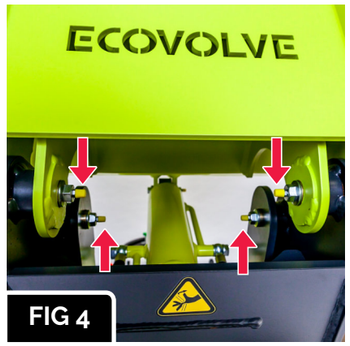

Grease point 6-9

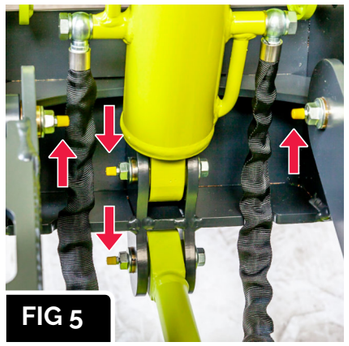

Grease point 10-13

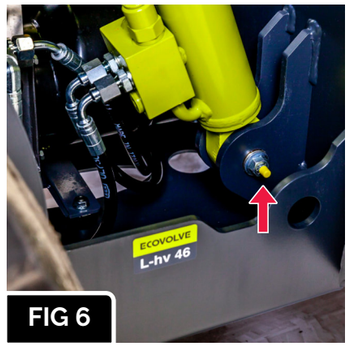

Grease point 14-15

Hydraulic system

Hydraulic System	1. Check hydraulic system for leaks. 2. Check hydraulic rams. 3. Check oil level. 4. Check hydraulic performance.
	**CAUTION** Indicates a hazardous situation which, if not avoided, could result in moderate or serious injury. ‣ Risk of burning from hot hydraulic oil. Allow the oil to cool before running maintenance checks. ‣ Never use your hand to check for an oil leak, hydraulic oil can be hot. Use appropriate hand protection. ‣ Only fill the hydraulic system with new clean recommended hydraulic oil, if the oil is contaminated hydraulic components may become damaged as a result. ‣ Always use the same original type of oil when topping up or changing. ‣ The Ecovolve range uses HYD 46 Hydraulic oil. Tank capacity is 2.8 litres
	**DANGER** **CRUSH POINT** Indicates a hazardous situation which, if not avoided, could result in death or serious injury. Obey all safety messages that follow this symbol to avoid injury or death.
	**HAND PROTECTION REQUIRED!** When the instruction for hand protection is required to avoid personal injury.
	**PROTECTIVE EYEWEAR REQUIRED!** When the instruction for protective eyewear is stated, protective eyewear must always be worn when operating the machine to avoid personal injury.

1 & 2. Check hydraulic system and for leaks

When checking the hydraulic system for leaks, protective gloves and glasses must be worn.

- Raise the skip to gain access to the hydraulic system. Turn off the machine, remove the key and engage the emergency stop button.
- Visually inspect the hydraulic system for leaks or damage.
- Turn the machine on and lower the skip to inspect system for leaks and damage under load.
- Keep a safe distance back from the machine if another technician is operating the skip function.
- **Record Results.**

3. Check oil level

- When checking the hydraulic oil level protective gloves and glasses must be worn.
- The skip MUST be in the lowered position with all hydraulic cylinders closed. Engage the emergency stop button and remove key from ignition. Screw tank cap anti clockwise and check the level indicator (fig 1 to fig 3).
- If hydraulic oil is needed fill with **HYD 46** hydraulic oil to the full level on the dipstick.
- Top up oil using the same port as the dipstick is threaded into.
- **Record Results.**

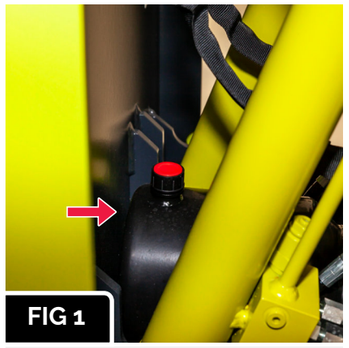

Location of the hydraulic oil tank.

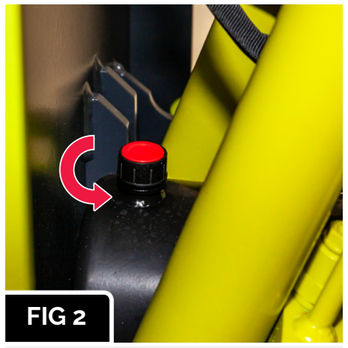

Unscrew the filler cap to gain access to the oil dipstick.

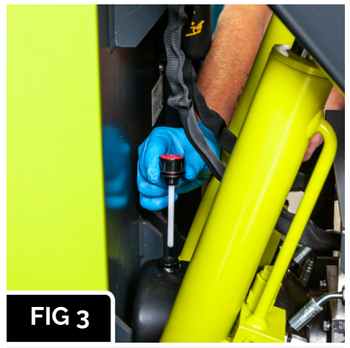

Check the level and top up with oil if necessary.

4. Check hydraulic performance

- Make sure area is free from obstructions.
- Test all functions of the hydraulic system.
- **Record Results.**

Rear drive unit

Rear Drive Unit	Check oil level of rear drive unit.
⚠	⚠ **CAUTION** Indicates a hazardous situation which, if not avoided, could result in moderate or serious injury.

Check oil level of rear drive unit

- Securely park the Truck and take all safety precautions.
- Turn off the machine, remove the key and engage the emergency stop button.
- On the bottom of the rear drive unit, check oil level through viewing window.
- If the oil level is low please follow the instructions provided in the first 150 working hours service section for the rear drive unit and top up as necessary with **BP ENERGEAR HYPO 85W- 140 OIL .**
- **Record Result.**

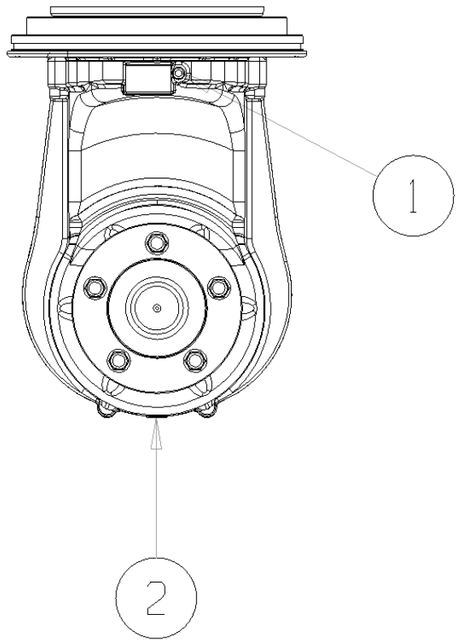

Braking system

Braking system	Inspect brake performance and adjust as needed.
⚠	⚠ **CAUTION** Indicates a hazardous situation which, if not avoided, could result in moderate or serious injury.

1. Inspect brake performance and adjust as needed

- Ensure the area is free from objects and dangers. Turn off the truck, remove the key and engage the emergency stop button if brake adjustment is required.
- Test brake performance. If adjustment is needed continue as instructed below.
- To adjust brakes, jack up the truck and secure it on adequate capacity jack stands.
- Remove the adjusting hole cover from the bottom of the brake backing plate (fig 1).
- With a flat head screw driver rotate the star wheel of the adjuster to expand the brake shoe assembly (fig 2).
- Adjust the brake shoes until the pressure of the lining against the drum makes the wheel difficult to turn (fig 3).
- Then rotate the star wheel adjuster in the opposite direction until the wheel turns freely with a slight lining drag, replace the adjusting hole cover and lower the wheel to the ground.
- Repeat the same procedure for the opposite wheel
- **Record Result.**

FIG 1

Remove debris if present. Gain access through backing plate

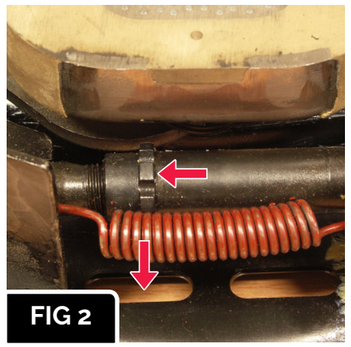

FIG 2

Adjust the star wheel with screwdriver through backing plate

FIG 3

Adjust brake shoe as needed.

charging system

Electric Charging	Check charging system and cable.
⚠	⚠ **CAUTION** Indicates a hazardous situation which, if not avoided, could result in moderate or serious injury.

Check charging system and cable

- Test charging system and inspect cable for damage.
- During the next charging cycle check that the system led lights are illuminated ansd working correctly on the charging display.
- **Record Result.**

FIG 1

The charging compartment

FIG 2

Match the correct voltage charger to the port

150 WORKING HOUR SERVICE (rear drive unit)

The following items must be serviced at the specified working hours. Proof must be submitted to Ecovolve that this service has been completed by a competent technician. To do this complete this form and submit it to Ecovolve including all relevant vehicle identification information at www.ecovolve.eu.

Failure to do this will reduce or void your warranty! The truck has two Vehicle Identification Information items that are required and can be found on the rear drive unit and chassis as shown below (Fig 1 and Fig 2).

FIG 1

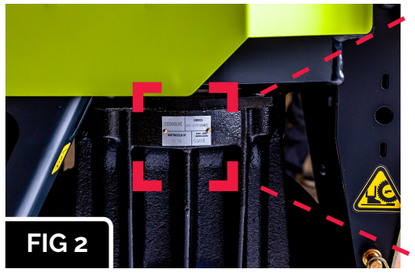
FIG 2

DAILY CHECKLIST	DATE	COMPLETED BY
Rear drive unit oil change completed at or before the first 150 working hours.		
Required Oil: BP ENERGEAR HYPO 85W-140 Oil x 5 Litres.		

VEHICLE IDENTIFICATION INFORMATION		
Model:		
Serial Number & Year:		
Rear Drive Unit Serial Number:		
Rear Drive Unit Number:		
Rear Drive Unit Month And Year of Production:		
Working Hours Completed at Time of Service:		
Notes		

Rear drive unit

Rear drive unit oil change at first 150 working hours

After the first 150 working hours of use, the rear drive unit requires its first oil change.

Following this service, check the oil level after first 50 working hours and every 500 working hours there after and change the oil as per regular service intervals which is 2000 working hours.

CAUTION Indicates a hazardous situation which, if not avoided, could result in moderate or serious injury.

- Risk of burning from hot oil. Allow the oil to cool before running maintenance checks.
- Relieve the system pressure slowly before starting service on the drive unit. Never use your hand to check for an oil leak. Use appropriate hand protection.
- Only fill the drive unit system with new clean recommended oil, if the oil is contaminated components may become damaged as a result.
- Always use the same original type of oil when topping up or changing.
- The drive unit uses **BP ENERGEAR HYPO 85W-140 OIL** X 5 litres.

Rear drive unit identification number

- Before starting any service, record the transmission identification number of the rear drive unit for submission to Ecovolve. This is required to maximise your warranty.
- Record the necessary information as shown and submit to Ecovolve at www.ecovolve.eu. A copy of this form is included at the end of this manual.
- The transmission identification number is printed on the tag placed on one side of the rear drive unit, as shown below (fig 1).

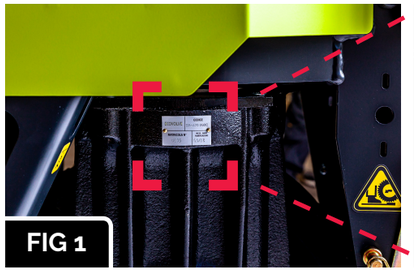
FIG 1

A. SERIAL NUMBER

B. UNIT DESIGN

C. MONTH AND YEAR OF MANUFACTURE

Changing the oil

⚠ CAUTION Indicates When this operation is executed immediately after a long operating time, oil in the unit may be hot; please wear special gloves.

- Turn off the truck, remove the key and engage the emergency stop button.
- Lay the vehicle on a flat surface and block the wheels.
- Clean the surface around the oil filling plug and the drain plug.
- Place a suitable container under the drain hole.
- Unscrew the oil filling plug (ref. 1) by means of a 7mm hex wrench head.
- Unscrew the oil drain plug (ref. 2) by means of a 7mm hex wrench head.
- Convey all the oil into the appropriate container. (Necessary draining time is about 5 min.)
- Clean the plug of the drain hole, apply sealant (ref. 2), screw it and fasten it with a tightening torque of 22 Nm.
- To make topping up easier, use a funnel and small hose. Hose diameter 12 mm max.
- The correct oil level is when the oil comes out from the filling hole
- During the topping up phase, turn the wheel shaft to prevent air bubbles from coming in.
- Screw the filling plug after having applied sealant (ref. 1) and fasten with a tightening torque of 22 Nm.
- Remove any oil drippings using a dry cloth.
- The oil level must be checked again after a short operating period. If necessary top up with the same oil to reach the correct level.
- **Record Result.**

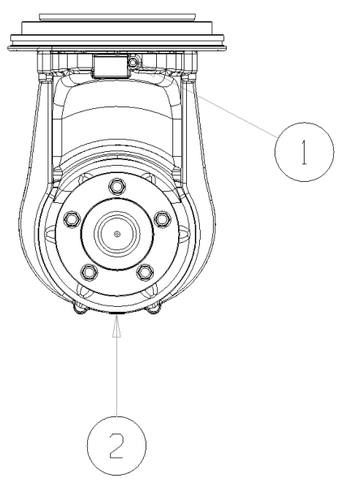

500 WORKING HOUR INSPECTION

The following items must be serviced at the specified working hours. Proof must be submitted to Ecovolve that this service has been completed by a competent technician. To do this complete this form and submit it to Ecovolve including all relevant vehicle identification information at www.ecovolve.eu. **Failure to do this will reduce or void your warranty! The Vehicle has two Identification Information items that are required and can be found on the rear drive unit and chassis as shown below. (Fig 1 and Fig2).**

FIG 1


FIG 2

SERVICE ITEMS		DATE	COMPLETED BY
Chassis And Truck Frame	Inspect for any damage of load bearing parts		
	Inspect all rams and joints		
Wheels	Inspect wheels for wear and damage		
	Check wheel nut torque		
Lubrication	Check all 15 grease joint fittings for proper lubrication, add grease as required.		
Hydraulic System	Check systems for leaks		
	Change hydraulic oil level		
Rear Drive Unit	Inspect for leaks and unusual noise		
	Grease gears and check for wear		
	Check oil level		
Braking System	Inspect brake performance and adjust as needed		
	Check for brake wear		

VEHICLE IDENTIFICATION INFORMATION

Model:	
Serial Number & Year:	
Rear Drive Unit Serial Number:	
Rear Drive Unit Design:	
Rear Drive unit Month And Year of Production:	
Working Hours Completed at Time of Service:	

Chassis and frame

Chassis And Frame	1. Inspect for any damage to the chassis and bodywork. 2. Inspect any load bearing parts and joints.
	**DANGER** **CRUSH POINT** Indicates a hazardous situation which, if not avoided, could result in death or serious injury. Obey all safety messages that follow this symbol to avoid injury or death. Ensure the machine is powered off and the emergency stop button engaged before inspecting the machine. Keep a safe distance back from the machine if another technician is operating the skip function.

Chassis and frame inspection.

- In order to to perform a full inspection of the chassis and frame, the skip should be raised in order to gain access.
- Before performing any inspections ensure that the machine is powered off and the emergency stop button is engaged.
- Inspect the chassis and any load bearing parts and joints.
- Check bodywork and panels for any damage.
- Do not operate machine if any damage is present.
- **Record Result.**

Wheels

Wheels	1. Check all wheel nuts are tight. Inspect tyres for wear and damage. 2. Check wheel bearings.
	**DANGER** **WHEEL CRUSH** Indicates a hazardous situation which, if not avoided, could result in serious injury. Obey all safety messages that follow this symbol to avoid injury.

1. Check wheel nuts are tight and inspect wheels and tyres for wear and damage.

- Inspect all wheels and tyres for damage and trapped debris, remove debris if present (fig 1).
- Inspect the front and rear wheels and the 5 retaining nuts on each wheel. Check that the retaining nuts are tight.
  If required, use a torque wrench to tighten any loose retaining nut to the specified torque setting as described below.
- The tightening torque of the front wheels retaining nuts is 135 Nm (fig 2).
- The tightening torque of the rear drive unit retaining nuts is 135 Nm (fig 3).
- **Record Result.**

FIG 1 Inspect the front and rear wheels and tyres for wear and damage. Remove any debris if present

FIG 2 Check the front wheel retaining wheel nuts. If loose, tighten to the correct specified torque settings.

FIG 3 Check the rear drive unit retaining wheel nuts. If loose, tighten to the correct specified torque settings.

2. Check wheel bearings

- Inspect all wheel bearings for wear or signs of damage.
- **Record Result.**

Steering and dashboard

Steering & Dashboard	Check all steering functions & switches.
⚠	⚠ **CAUTION** Ensure when testing the steering system that the test area is free from obstructions and pedestrians.

Steering and dashboard inspection

- As the steering and dashboard service requires the truck to be operational, ensure the test area is free from obstructions and pedestrians before proceeding with the service.
- Complete each of the following tests (fig 1 to fig 14) to ensure each function and switch of the steering system and dashboard are working correctly.
- **Record Result.**

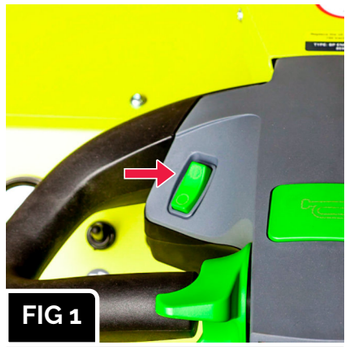

FIG 1

Test the the flashing beacon & alert buzzer switch on the tiller control.

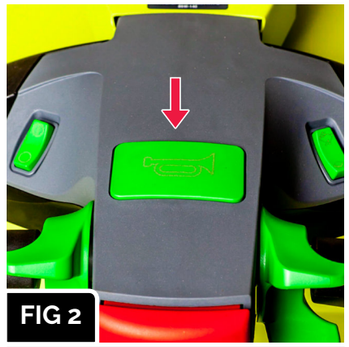

FIG 2

Horn switch. Pressed IN will sound horn.

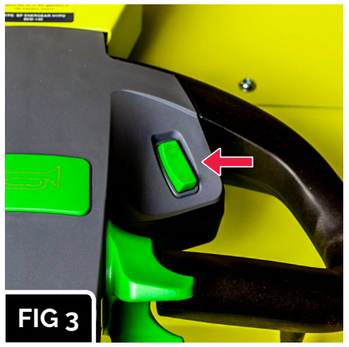

FIG 3

Check the speed Switch.Two options Slow and Fast.

FIG 4

Move the tiller head left and right to check the steering controls.

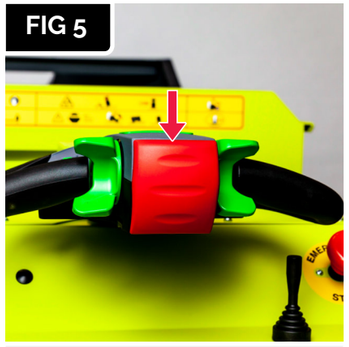

FIG 5

Test the EMR Reverse protection Switch. When pressed IN will STOP the truck and move forward.

FIG 6

Check the traction paddles.
UP = forward
DOWN = reverse.

Steering and dashboard inspection

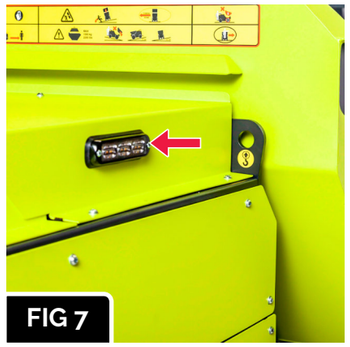

FIG 7

Ensure the flashing beacon is working correctly.

FIG 8

Multi Function Display. Ensure all functions are working correctly.

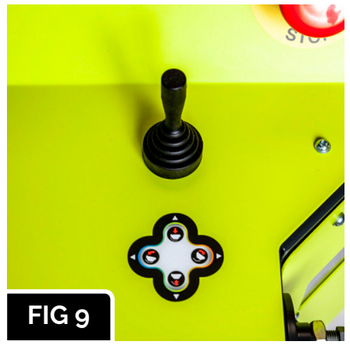

FIG 9

Skip lever. Ensure all 4 functions work correctly.

FIG 10

Check the emergency Stop button. When pressed down, shuts machine down.

FIG 11

Ensure the light switch is working correctly.
If applicable check the remote control switch.

FIG 12

Ensure front facing lights are functioning and free from debris.

FIG 13

Ensure rear facing lights are functioning and free from debris.

Lubrication

Lubrication	Check all 15 grease point fittings for proper lubrication, add grease as required.
	**DANGER** **CRUSH POINT** Indicates a hazardous situation which, if not avoided, could result in death or serious injury. Obey all safety messages that follow this symbol to avoid injury or death. ‣ Ensure the Truck is powered off and emergency switch is Pushed down before inspecting machine. ‣ Keep a safe distance back from the machine if another technician is operating the skip function.

Check all 15 grease point fittings for proper lubrication, add grease as required

- Raise the skip to gain access to all the grease points. Turn the machine off, remove the key and engage the emergency stop button.
- Remove dust cap from grease point where caps are applied.
- If required, apply grease to each point with suitable grease using a grease gun (fig 1 to fig 8). The Ecovolve range requires just one pump of a standard grease gun.
- Clean surplus grease from point with a damp cloth and reapply dust cap.
- **Record Result.**

Grease point locations

A. Grease point 1

B. Grease point 2–3

C. Grease point 4–5

D. Grease point 6–9

E. Grease point 10–13

F. Grease point 14–15

Check all 15 grease point fittings for proper lubrication, add grease as required

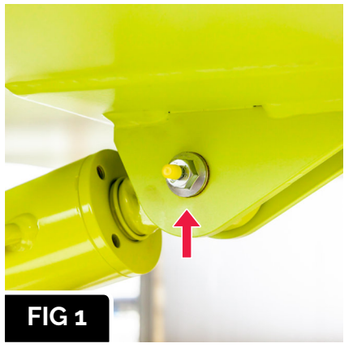

Grease point 1

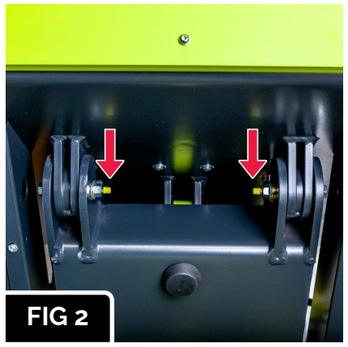

Grease point 2-3

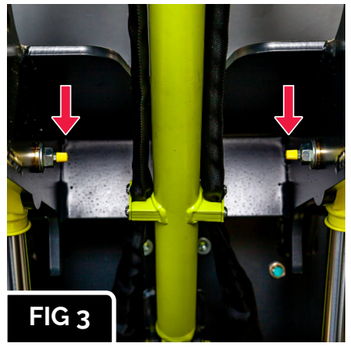

Grease point 4-5

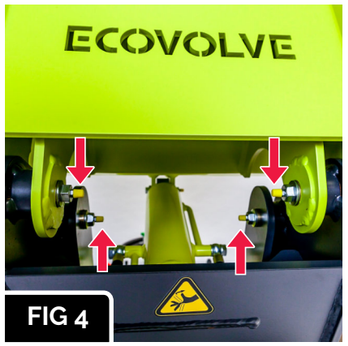

Grease point 6-9

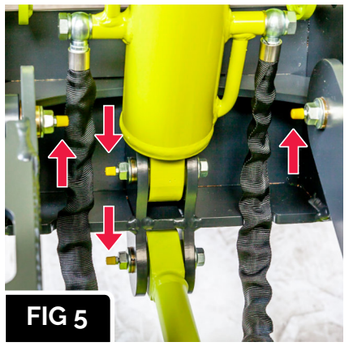

Grease point 10-13

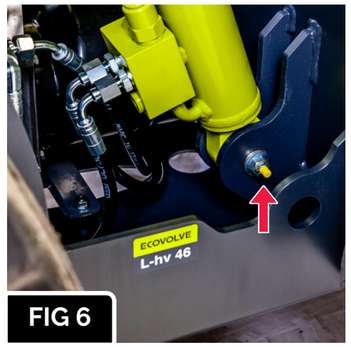

Grease point 14-15

Hydraulic system

Hydraulic System	1. Check hydraulic system for leaks. 2. Replace hydraulic oil 3. Check oil level. 4. Check hydraulic performance.
	⚠ **CAUTION** Indicates a hazardous situation which, if not avoided, could result in moderate or serious injury. ‣ Risk of burning from hot hydraulic oil. Allow the oil to cool before running maintenance checks. ‣ Never use your hand to check for an oil leak, hydraulic oil can be hot. Use appropriate hand protection. ‣ Only fill the hydraulic system with new clean recommended hydraulic oil, if the oil is contaminated hydraulic components may become damaged as a result. ‣ Always use the same original type of oil when topping up or changing. ‣ The Ecovolve range uses HYD 46 Hydraulic oil. Tank capacity is 2.8 litres
	⚠ **DANGER** **CRUSH POINT** Indicates a hazardous situation which, if not avoided, could result in death or serious injury. Obey all safety messages that follow this symbol to avoid injury or death.
	HAND PROTECTION REQUIRED! When the instruction for hand protection is required to avoid personal injury.
	PROTECTIVE EYEWEAR REQUIRED! When the instruction for protective eyewear is stated, protective eyewear must always be worn when operating the machine to avoid personal injury.

1. Check hydraulic system for leaks

When checking the hydraulic system for leaks, protective gloves and glasses must be worn.

- Risk of burning from hot hydraulic oil. Allow the oil to cool before running maintenance checks.
- When checking the hydraulic oil level protective gloves and glasses must be worn.
- Lower skip fully and remove key from ignition.
- Inspect the condition of ALL hydraulic hoses and check for leaks at ALL connection points and ram seals.
- Examine all hydraulic components for oil leaks.
- If a leak is present, do not use the machine.
- **Record Results.**

2. Replace hydraulic oil

- When replacing the hydraulic oil, protective gloves and glasses must be worn.
- Lower skip fully to access the dipstick (fig 1). Remove the key from ignition and engage the emergency stop button.
- Remove the bung from the bottom of the tank (fig 2). This can be accessed through a hole in the belly plate with a 6mm allen key. Retighten after drainage to a torque setting of 22nm.
- Fill with **HYD 46 hydraulic oil** to the full level on the dipstick.

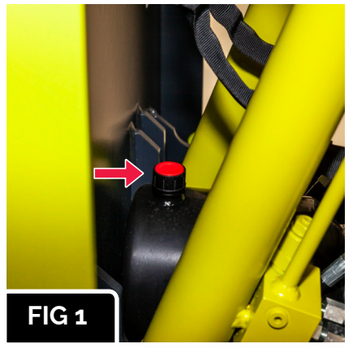

Lower the skip and access the dip stick.
Take all precautions to avoid injury.

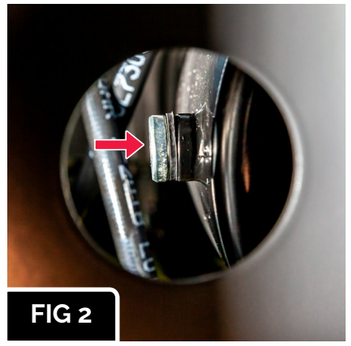

Remove bung with 6mm allen key and drain oil. The bung can be accessed through holes in belly plate.

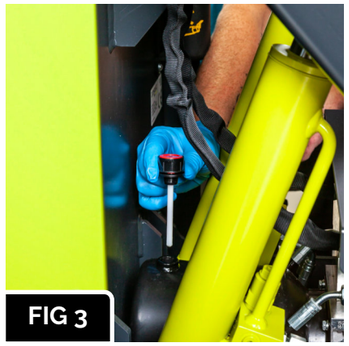

Fill with hydraulic oil to the full level on the dipstick

3. Check oil level

- Following the oil change, ensure the oil is at the required level.
- **Record Results.**

4. Check hydraulic performance

- Make sure area is free from obstructions or danger.
- Test all functions of the hydraulic system.
- **Record Results.**

Rear drive unit service

Rear Drive Unit	1. Inspect for leaks, defects or unusual noise in the rear drive unit. 2. Grease gears and check for wear. 3. Check oil level.
!	After the first 150 working hours of use, the rear drive unit requires its first oil change. Following this service, check the oil level after 50 working hours and every 500 working hours and change the oil as per regular service intervals which is 2000 working hours.
⚠	⚠ **CAUTION** Indicates a hazardous situation which, if not avoided, could result in moderate or serious injury.

1. Inspect for leaks, defects or unusual noise in drive system

- Examine all of the rear drive unit for leaks and defects.
- If leak or defect is present, have a competent technician examine and take correct action.
- **Record Result.**

2. Grease gears and check for wear

- Securely park the Truck and take all safety precautions.
- Remove the side cover of the rear drive unit (fig 1).
- Grease as needed. Do not over grease.
- **Record Result.**

3. Check oil level of rear drive unit

- Securely park the Truck and take all safety precautions.
- On the bottom of the rear drive unit, check oil level through viewing window.
- If the oil level is low please top up as necessary with
  BP ENERGEAR HYPO 85W- 140 Oil x 5 Litres.
- **Record Result.**

FIG 1
Remove side cover to grease rear drive unit gears.

Braking system

Braking system	1. Inspect brake performance and adjust as needed. 2. Check for brake wear.
⚠	⚠ **CAUTION** Indicates a hazardous situation which, if not avoided, could result in moderate or serious injury.

1. Inspect brake performance and adjust as needed

- Ensure area is free from objects and dangers. Turn off the machine, remove the key and egage the emergency stop button if brake adjustment is required.
- Test brake performance. If adjustment is needed continue as instructed below.
- To adjust brakes, jack up the Truck and secure it on adequate capacity jack stands (fig 1).
- Remove the adjusting hole cover from the bottom of the brake backing plate.
- With a flat head screw driver rotate the star wheel of the adjuster to expand the brake shoe assembly (fig 2).
- Adjust the brake shoes until the pressure of the lining against the drum makes the wheel difficult to turn (fig 3).
- Then rotate the star wheel adjuster in the opposite direction until the wheel turns freely with a slight lining drag, replace the adjusting hole cover and lower the wheel to the ground.
- Repeat the same procedure for the opposite wheel
- **Record Result.**

FIG 1
Remove debris if present. Gain access through backing plate

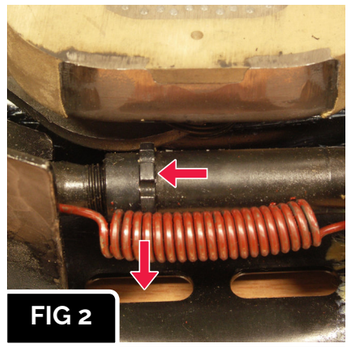

FIG 2
Adjust the star wheel with screwdriver through backing plate

FIG 3
Adjust brake shoe as needed.

Battery care

Battery Care	The following items must be serviced at the specified working hours. Proof must be submitted to Ecovolve that this service has been completed by a competent technician. To do this complete the relevant form and submit it to Ecovolve including all relevant vehicle identification information on www.ecovolve.eu **Failure to do this will reduce or void your warranty!**

Maintaning the battery

Certain requirements for a long battery life must be adhered to without fail.

During storage lead acid batteries will gradually self-discharge, It is recommended that monobloc state of charge be kept about 12.20v, while the battery is in storage, in order to avoid irreversible capacity loss. The rate of self discharge increases with increasing temperatures.

- It is recommended to store the truck in a cool dry environment.
- Every 6 months check the voltage of each monobloc, if the battery is judged to be fully charged no unit should deviate more than 0.15v from other units.
- When the truck is placed on charge it should be charged fully.
- Before the truck is placed into storage it should be fully charged if it has been stored for long periods at any given time it should be charged every two months.
- Every 30 days the truck should be left plugged in for 16 hours as the chargers will be performing a maintenance mode on the batteries.
- The led display on each charger will tell you what state of charge the batteries are at unplug when both chargers have gone to green.
- Do not drill through any panel of the truck that encloses the battery packs doing so could cause a possible leakage of electrolytes.

⚠ CAUTION

Don't dispose of batteries in unapproved sites, the batteries contain electrolytes and compound lead which is harmful to nature and can contaminate the environment if not disposed of properly.

2000 WORKING HOUR SERVICE

The following items must be serviced at the specified working hours. Proof must be submitted to Ecovolve that this service has been completed by a competent technician. To do this complete this form and submit it to Ecovolve including all relevant vehicle identification information at www.ecovolve.eu.

Failure to do this will reduce or void your warranty! The truck has two Vehicle Identification Information items that are required and can be found on the rear drive unit and chassis as shown below.

FIG 1

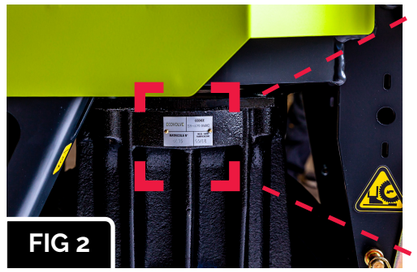
FIG 2

SERVICE ITEMS		DATE	COMPLETED BY
Rear Drive Unit	Change rear drive unit oil		

VEHICLE IDENTIFICATION INFORMATION	
Model:	
Serial Number & Year:	
Rear Drive Unit Serial Number:	
Rear Drive Unit Design:	
Rear Drive unit Month And Year of Production:	
Working Hours Completed at Time of Service:	

REAR DRIVE UNIT - OIL CHANGE

Rear Drive Unit	Replace oil.
	After the first 150 working hours of use, the rear drive unit requires its first oil change. Following this service, check the oil level after first 50 working hours and every 500 working hours there after and change the oil as per regular service intervals which is 2000 working hours.
	⚠ CAUTION Indicates a hazardous situation which, if not avoided, could result in moderate or serious injury. • Risk of burning from hot oil. Allow the oil to cool before running maintenance checks. • Relieve the system pressure slowly before starting service on the drive unit. Never use your hand to check for an oil leak. Use appropriate hand protection. • Only fill the drive unit system with new clean recommended oil, if the oil is contaminated components may become damaged as a result. • Always use the same original type of oil when topping up or changing. • The drive unit uses **BP ENERGEAR HYPO 85W-140 Oil** x 5 Litres.

Rear drive unit oil change at 2000 working hours

- Before starting any service record the transmission identification number of the rear drive unit for submission to Ecovolve. This is required to maximise your warranty.
- Record the necessary information as shown and submit to Ecovolve at www.ecovolve.eu. A copy of this form is included at the end of this manual.
- The transmission identification number is printed on the well-visible tag placed on one side of the rear drive unit, as shown below.

FIG 2

A. Serial

B. Unit design

C. Month and year of manufacture

5. SERVICING
2000 Hour rear drive unit - oil change

Rear drive unit oil change

⚠ CAUTION Indicates When this operation is executed immediately after a long operating time, oil in the unit may be hot; please wear special gloves.

- Turn off the truck, remove the key and engage the emergency stop button.
- Lay the vehicle on a flat surface and block the wheels.
- Clean the surface around the oil filling plug and the drain plug.
- Place a suitable container under the drain hole.
- Unscrew the oil filling plug (ref. 1) by means of a 7mm hex wrench head.
- Unscrew the oil drain plug (ref. 2) by means of a 7mm hex wrench head.
- Convey all the oil into the appropriate container. (Necessary draining time is about 5 min.)
- Clean the plug of the drain hole, apply sealant (ref. 2), screw it and fasten it with a tightening torque of 22 Nm.
- To make topping up easier, use a funnel and small hose. Hose diameter 12 mm max.
- The correct oil level is when the oil comes out from the filling hole
- During the topping up phase, turn the wheel shaft to prevent air bubbles from coming in.
- Screw the filling plug after having applied sealant (ref. 1) and fasten with a tightening torque of 22 Nm.
- Remove any oil drippings using a dry cloth.
- The oil level must be checked again after a short operating period. If necessary top up with the same oil to reach the correct level.
- **Record Result.**

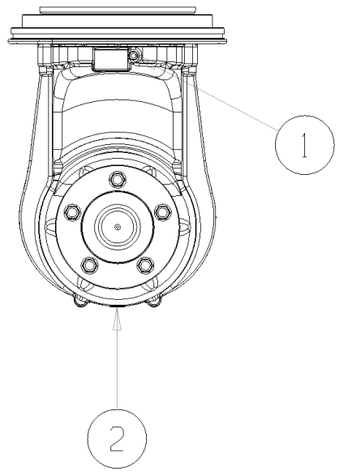

SERVICE AND INSPECTION FORMS

DAILY CHECKLIST

WARNING Failure to follow the daily checklist could result in a hazardous situation which could result in serious injury and damage to the truck.

Always carry out the daily checklist before operating the electric dumper.

If any item on the daily checklist fails, contact your site supervisor and DO NOT operate the truck before doing so..

DAILY CHECKLIST	DATE	COMPLETED BY
Check the Truck for damage and all décor is visible		
Check brakes		
Check tyres & wheels		
Check hydraulic hoses and connections for leaks		
Check the joystick function		
Check speed switch function		
Check sounder plinth, horn and flashing beacon		
Check traction paddles		
Check EMR Reverse protection switch		
Check the BDI indicator for errors		
Check all lights		
Check Emergency Stop button		
Check operators platform & safety rails functions		
Check that all grease nipples are adequately greased		
Check the condition of the charging cable		
Notes		

50 WORKING HOUR INSPECTION

The following items must be serviced at the specified working hours. The work must be completed by a competent technician.

Failure to do this will reduce or void your warranty! The Truck has two Vehicle Identification Information items that are required and can be found on the rear drive unit and chassis as shown below (fig 1 and fig 2).

FIG 1

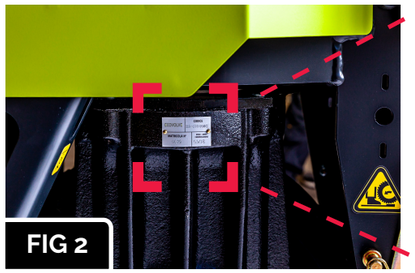
FIG 2

SERVICE ITEMS		DATE	COMPLETED BY
Chassis And Truck Frame	Check all safety symbols and décor is clearly visible		
	Check operator safety rails and platform		
Wheels	Check wheel nuts are tight		
	Check wheel bearings		
Steering & Dashboard	Check all steering functions & switches:		
	-Traction Paddles		
	-Speed Switch		
	-EMR Reverse protection switch		
	-Horn switch		
	-Safety buzzer		
	-Multi function display		
	-Skip lever functions		
	-Emergency stop button		
	-Light switches		
	-Remote control (if applicable)		

5. SERVICING
Service and inspection forms

50 WORKING HOUR INSPECTION

SERVICE ITEMS		DATE	COMPLETED BY
Steering & Dashboard	-Light display		
	-Check all sensors		
	-Test drive machine		
Lubrication	Check all 15 grease nipple fittings for proper lubrication, add grease as required.		
Hydraulic System	Check hydraulic system for leaks		
	Check hydraulic rams		
	Check oil level		
	Check hydraulic performance		
Rear Drive Unit	Check oil level		
Braking System	Check brake performance		
Charging	Check charging system and cable		
Safety Booklet	Check safety booklet is in a useable condition.		

VEHICLE IDENTIFICATION INFORMATION

Model:	
Serial Number & Year:	
Rear Drive Unit Serial Number:	
Rear Drive Unit Design:	
Rear Drive unit Month And Year of Production:	
Working Hours Completed at Time of Service:	

Notes:

500 WORKING HOUR INSPECTION

The following items must be serviced at the specified working hours. Proof must be submitted to Ecovolve that this service has been completed by a competent technician. To do this complete this form and submit it to Ecovolve including all relevant vehicle identification information at www.ecovolve.eu. **Failure to do this will reduce or void your warranty! The Vehicle has two Identification Information items that are required and can be found on the rear drive unit and chassis as shown below (fig 1 and fig 2).**

FIG 1


FIG 2

SERVICE ITEMS		DATE	COMPLETED BY
Chassis And Truck Frame	Inspect for any damage of load bearing parts		
	Inspect all rams and joints		
Wheels	Inspect wheels for wear and damage		
	Check wheel nut torque		
Lubrication	Check all 15 grease nipple fittings for proper lubrication, add grease as required.		
Hydraulic System	Check systems for leaks		
	Change hydraulic oil level		
Rear Drive Unit	Inspect for leaks and unusual noise		
	Grease gears and check for wear		
	Check oil level		
Braking System	Inspect brake performance and adjust as needed		
	Check for brake wear		

VEHICLE IDENTIFICATION INFORMATION

Model:	
Serial Number & Year:	
Rear Drive Unit Serial Number:	
Rear Drive Unit Design:	
Rear Drive unit Month And Year of Production:	
Working Hours Completed at Time of Service:	

5. SERVICING
Service and inspection forms

2000 WORKING HOUR SERVICE

The following items must be serviced at the specified working hours. Proof must be submitted to Ecovolve that this service has been completed by a competent technician. To do this complete this form and submit it to Ecovolve including all relevant vehicle identification information at www.ecovolve.eu.

Failure to do this will reduce or void your warranty! The truck has two Vehicle Identification Information items that are required and can be found on the rear drive unit and chassis as shown below (fig 1 and fig 2).

FIG 1

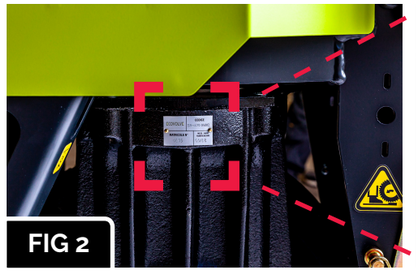
FIG 2

SERVICE ITEMS		DATE	COMPLETED BY
Rear Drive Unit	Change rear drive unit oil		

VEHICLE IDENTIFICATION INFORMATION

Model:	
Serial Number & Year:	
Rear Drive Unit Serial Number:	
Rear Drive Unit Design:	
Rear Drive unit Month And Year of Production:	
Working Hours Completed at Time of Service:	

6

TECHNICAL DATA

ECOVOLVE

		ED800	ED1000	ED1500
Capacity	Max safe load (Kg)	800	1000	1500
	Unladen weight (Kg)	1200	1200	1500
	Skip - Leveled (Ltr)	350	435	575
	- Heaped (Ltr)	480	600	800
	- Water level (Ltr)	225	315	460
Drive	Drive type	1 wheel drive	1 wheel drive	3 wheel drive
	Steering	1 wheel steer	1 wheel steer	1 wheel steer
	Speed (Km/h)	0-6	0-8	0-8
	Steering angle	90°	90°	90°
	Grade ability	15°	15°	15°
Transmission	Proportional	Drive	Drive	Drive
	Steering	Electric	Electric	Electric
	Tires - Front (2no. Super elastic)	27x8,5x15	27x8,5x15	27x8,5x15
	- Rear (1no. Super elastic)	21x8x9	21x8x9	21x8x9
	Brakes	Dynamic electric brake Negative parking brake		
Hydraulic system	Gear pump - Flow rate (Ltr/Min)	5.5	5.5	6.5
	- Oper. pressure (Bar)	130	130	150
	Pump motor (KW)	2.2	2.2	2.2
	Hydraulic tank capacity (Ltr)	2.8	2.8	5
Electric system	Voltage (V)	24	24	24
	Battery (KWH)	9.6	9.6	14.4
	Integrated Charging - Input (V AC)	100-240	100-240	100-240
	- Output (V DC)	50.0 A	50.0 A	100.0 A
	Recharge (Hrs)	8	8	10
Drive motor	Type	Induction motor		
	Output	5KW/7HP	5KW/7HP	5+4KW/11HP
	Emission	Zero	Zero	Zero
Noise	Driving (Db)	65	65	65
	Buzzer [adjustable] (Db)	60-80	60-80	60-80

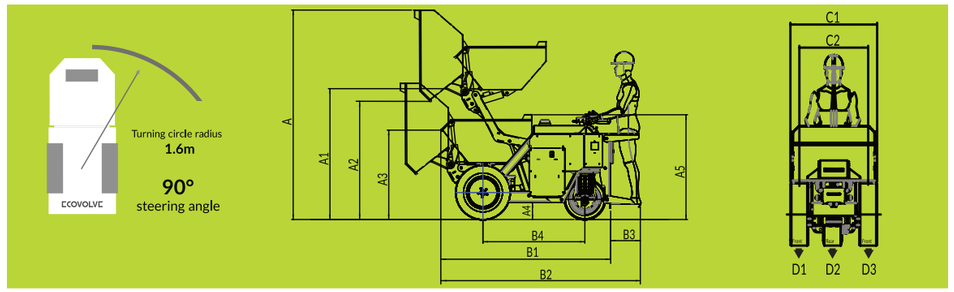

[mm]	A	A1	A2	A3	A4	A5	B1	B2	B3	B4	C1	C2
ED800	2610	1630	1470	1120	180	1310	2060	2390	340	1210	790	590
ED1000	2610	1630	1470	1120	180	1310	2060	2390	340	1210	980	780
ED1500	2870	1790	1600	1120	200	1340	2250	2580	340	1330	1170	970

Ground Pressure	Unladen D1/D3	Unladen D2	Laden D1/D3	Laden D2
ED800	280 kg	635 kg	650 kg	700 kg
ED1000	280 kg	635 kg	650 kg	700 kg
ED1500	375 kg	750 kg	1125 kg	750 kg

ECOVOLVE

		ED800	ED1000	ED1500
Capacity	Max safe load (Lbs)	1763	2200	3300
	Unladen weight (Lbs)	2645	2645	3300
	Skip - Leveled (Cubic feet)	12	15	20.3
	- Heaped (Cubic feet)	17	21	28.2
	- Water level (Gallons)	60	83	121
Drive	Drive type	1 wheel drive	1 wheel drive	3 wheel drive
	Steering	1 wheel steer	1 wheel steer	1 wheel steer
	Speed (Mph)	0-4	0-5	0-6
	Steering angle	90°	90°	90°
	Grade ability	15°	15°	15°
Transmission	Proportional	Drive	Drive	Drive
	Steering	Electric	Electric	Electric
	Tires - Front (2no. Super elastic)	27x8,5x15	27x8,5x15	27x8,5x15
	- Rear (1no. Super elastic)	21x8x9	21x8x9	21x8x9
	Brakes	Dynamic electric brake Negative parking brake		
Hydraulic system	Gear pump - Flow rate (Gallon/Min)	1.45	1.45	1.72
	- Oper. pressure (PSI)	1900	1900	2100
	Pump motor (KW)	2.2	2.2	2.2
	Hydraulic tank capacity (Gallons)	0.74	0.74	1.32
Electric system	Voltage (V)	24	24	24
	Battery (KWH)	9.6	9.6	14.4
	Integrated Charging - Input (V AC)	100-240	100-240	100-240
	- Output (V DC)	50.0 A	50.0 A	100.0 A
	Recharge (Hrs)	8	8	10
Drive motor	Type	Induction motor		
	Output	5KW/7HP	5KW/7HP	5+4KW/11HP
	Emission	Zero	Zero	Zero
Noise	Driving (Db)	65	65	65
	Buzzer [adjustable] (Db)	60-80	60-80	60-80

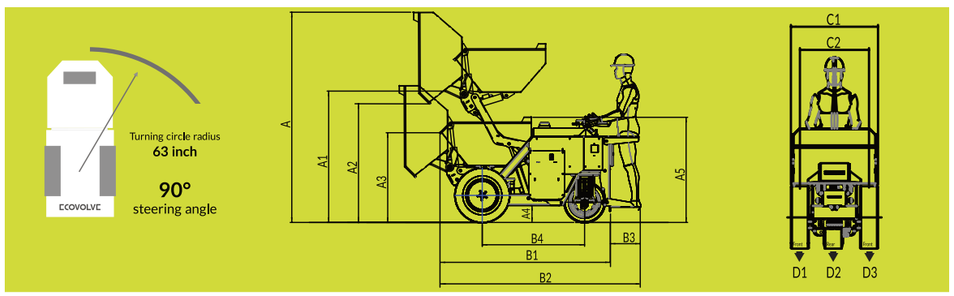

[In]	A	A1	A2	A3	A4	A5	B1	B2	B3	B4	C1	C2
ED800	103	64	58	44	7	51.6	81.0	94.2	13.3	47.8	31.2	23.2
ED1000	103	64	58	44	7	51.6	81.0	94.2	13.3	47.8	38.7	30.8
ED1500	113	70	63	44	8	52.3	88.4	101.7	13.3	52.2	46.2	38.3

Ground Pressure	Unladen D1/D3	Unladen D2	Laden D1/D3	Laden D2
ED800	617 lbs	1400 lbs	1433 lbs	1543 lbs
ED1000	617 lbs	1400 lbs	1433 lbs	1543 lbs
ED1500	827 lbs	1653 lbs	2480 lbs	1653 lbs

ED800 ELECTRIC DUMPER

ED800 Electric Dumper exploded front view parts list

6. TECHNICAL DATA
ED800 Parts list

ED800 Electric Dumper exploded rear view parts list

6. TECHNICAL DATA
ED800 Parts list

steering assembly tiller head parts list

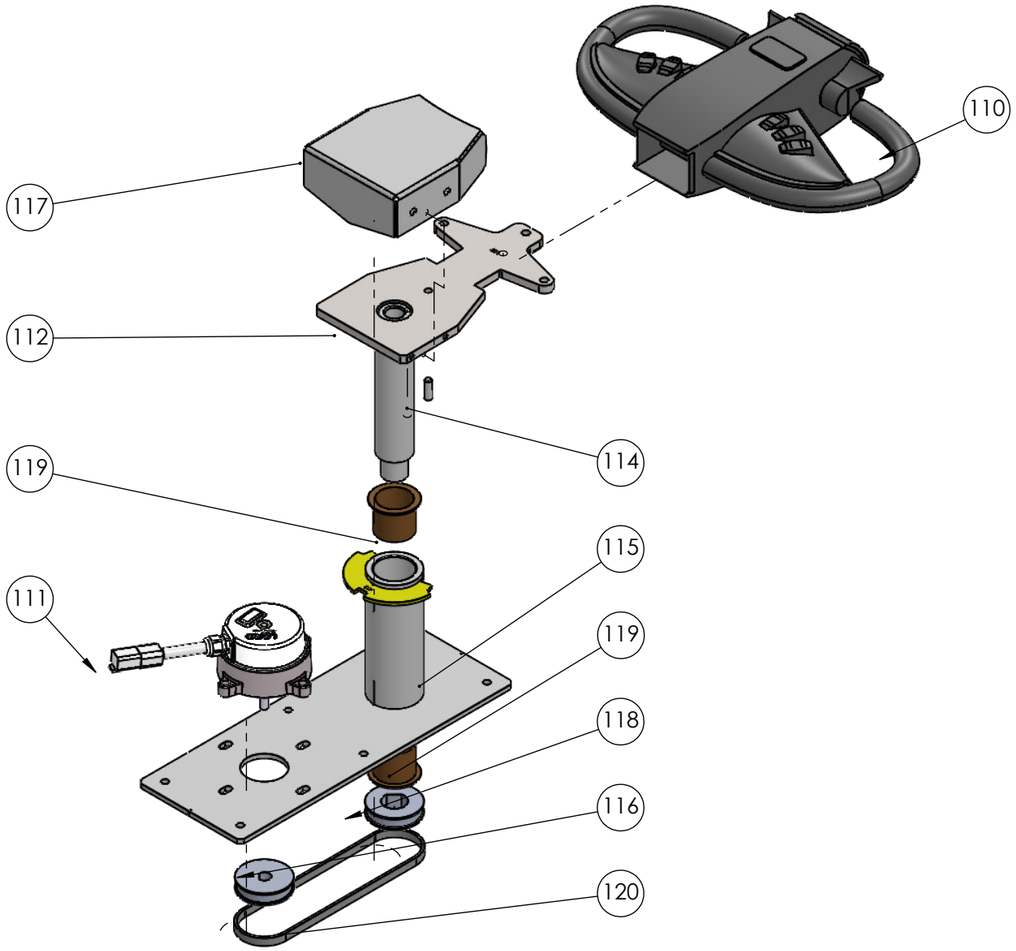

Operators platform and safety arm parts list

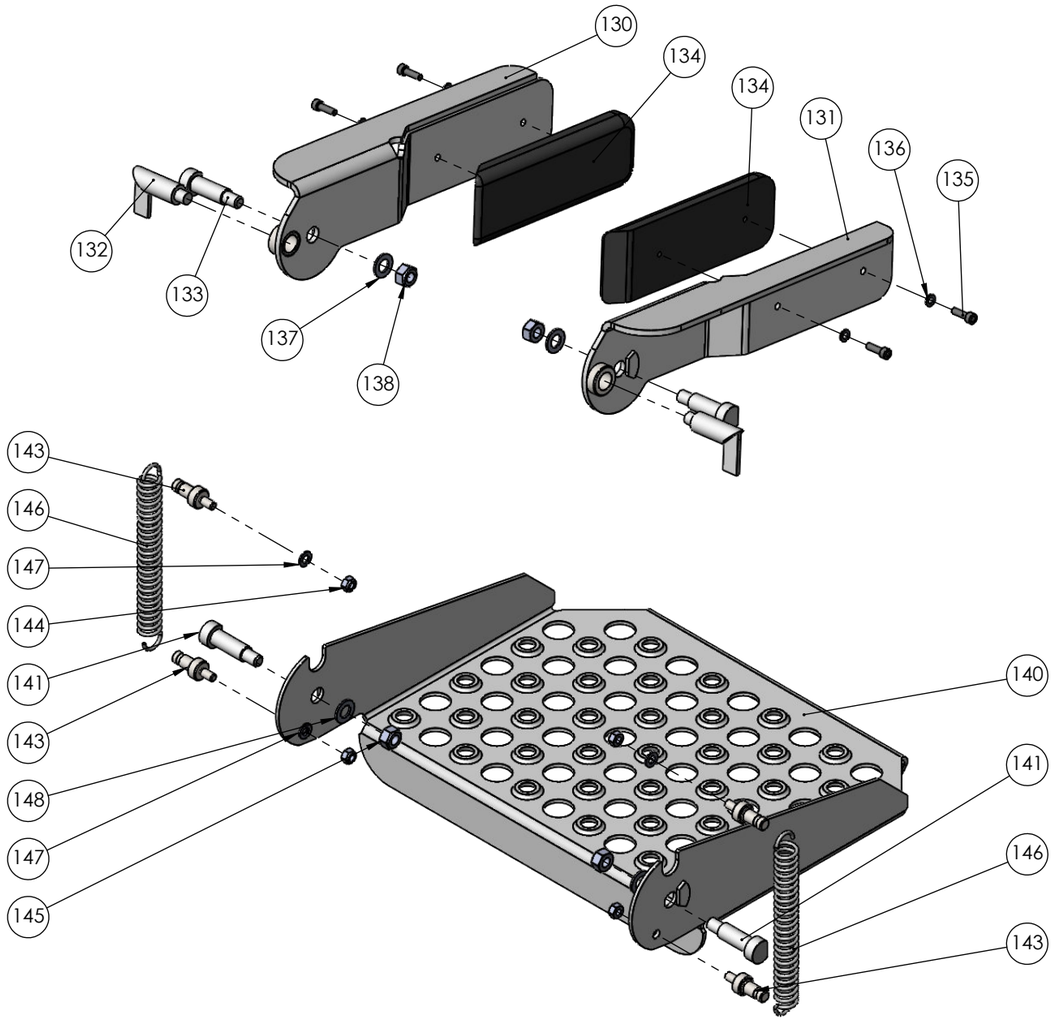

6. TECHNICAL DATA
ED800 Parts list

Operators platform and safety arm parts list

Operators platform

Safety rail

Tiller head parts list

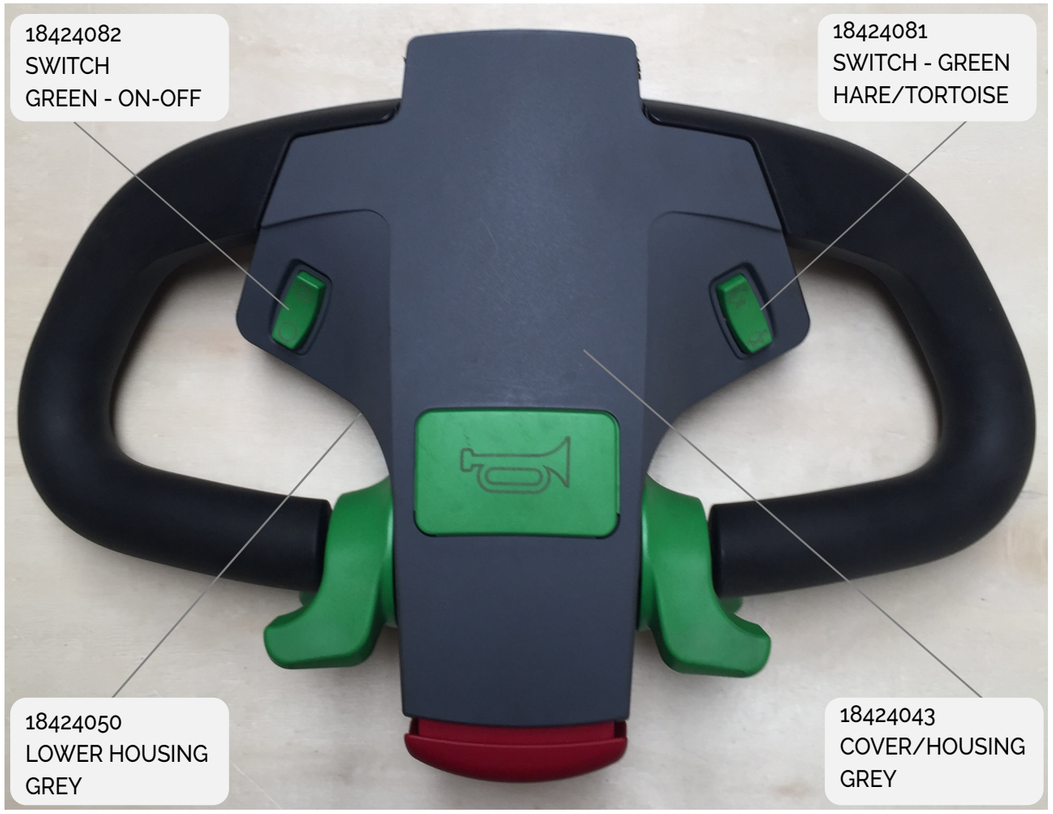

6. TECHNICAL DATA
ED800 Parts list

Hydraulic system parts list

Hydraulic system parts list

6. TECHNICAL DATA
ED800 Parts list

Electrical system parts list

Electrical system parts list

Drive unit parts list

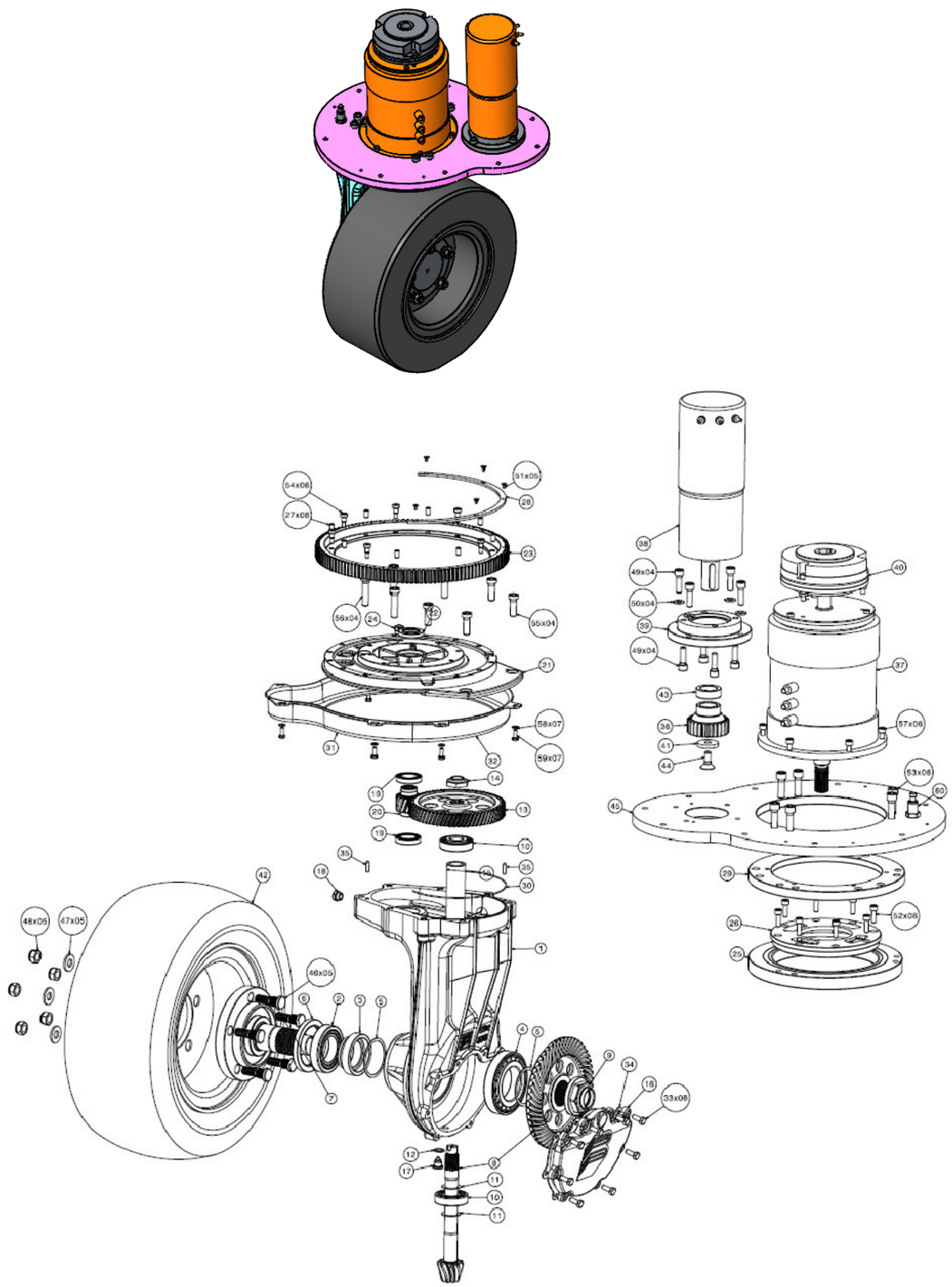

Drive unit parts list

Pos	Q.ta	Part number	Description
1	1	570.0001.00.A	Body Casting
2	1	313054	Tapered Roller Bearing
3	1	350.004.00-A	Wheel Bearing Spacer
4	1	313055	Roller Bearing
5	2	350.0003.00	Shim 76x65x0 3mm
6	1	601196	Sealing Ring AS-75x100x10
7	1	475.0049.00-E	Wheel Flange
8	1	570.0002.00	Bevel
9	1	475.0109.00-A	Collar Nut m36x2
10	2	313056	Roller bearing
11	2	250.0007.00	Shim
12	2	“	Shim
13	1	400.0006.00-A	Ring Gear
14	1	230.0007.00-A	Collar Nut m20 x 1.5
15	1	570.0009.00-A	Bearing spacer pinion
16	1	350.0019.00-A	Rear Cover
17	1	744037	Sump plug
18	1	744030	Oil Level Plug m14 x 1.5
19	2	313057	Ball Bearing
20	1	400.0009.00-B	Steering Motor Gear
21	1	400.0011.00-B	Pivot Bearing
22	1	801199	Seal 30x47x7
23	1	570.0005.00-A	Steering Ring Gear
24	1	744021	Breather Plug m14 x 1.5
25	1	3130004	Bearing
26	1	475.0050.00-B	Fixed Motor Bracket
27	8	503009	Dowel Pins 8 x 16
28	1	570.0033.00	Sensor Position Plate
29	1	475.0032.00B	Motor Mounting Flange
30	1	300112	Sealing Gasket
31	1	570.0022.00	Crankcase Left
32	1	570.0029.00	Crankcase Right
33	8	430808	Bolt M8 x 30mm
34	8	“	Bolt M8 x 30mm
35	2	530600	Dowel Pin 8 x 20
36	1	504011300	Steering Gear
37	1	570.0026.00	Traction Motor 24v
38	1	4008.0047.00	Steering Gearbox 24v
39	1	4008.0058.00	Steering Flange Plate
40	1	570.0031.00	Em Brake 75nm 24v
41	1	417.0052.00	Steering Motor Washer
42	1	570.0012.00	Tire 21 x 8 x 9
43	1	475.0020.00	Steering Motor Spacer
44	1	421216	Bolt m12 x 30mm
45	1	570.0032.00	Banjo Plate
46	5	345011400-B	Wheel Studs
47	5	440710	Washer 15 x 32 x 3
48	5	501404	Wheel Nuts m14 x 1.5
49	8	401024	Allen Head Bolts m10 X 35mm
50	4	430425	Spring Washer 5 x 20 x 2
51	5	421005	Bolt m8 x 25mm
52	8	430425	Allen Head Bolt m8 x 25mm
53	8	401204	“ “ “ m12 x 50
54	6	481029	Collar Bolt m6 x 10mm
55	4	401233	Allen Head Bolt m12 x 35mm
56	4	401232	“ “ “ m12 x 50mm
57	6	400902	“ “ “ m8 x 20mm
58	7	440501	External Washer 5.5 x 9 x 0.5
59	7	430602	Bolt m6 x 16mm
60	1	600121	Homing Sensor m18 x 1

ED1000 ELECTRIC DUMPER

ED1000 Electric Dumper exploded front view parts list

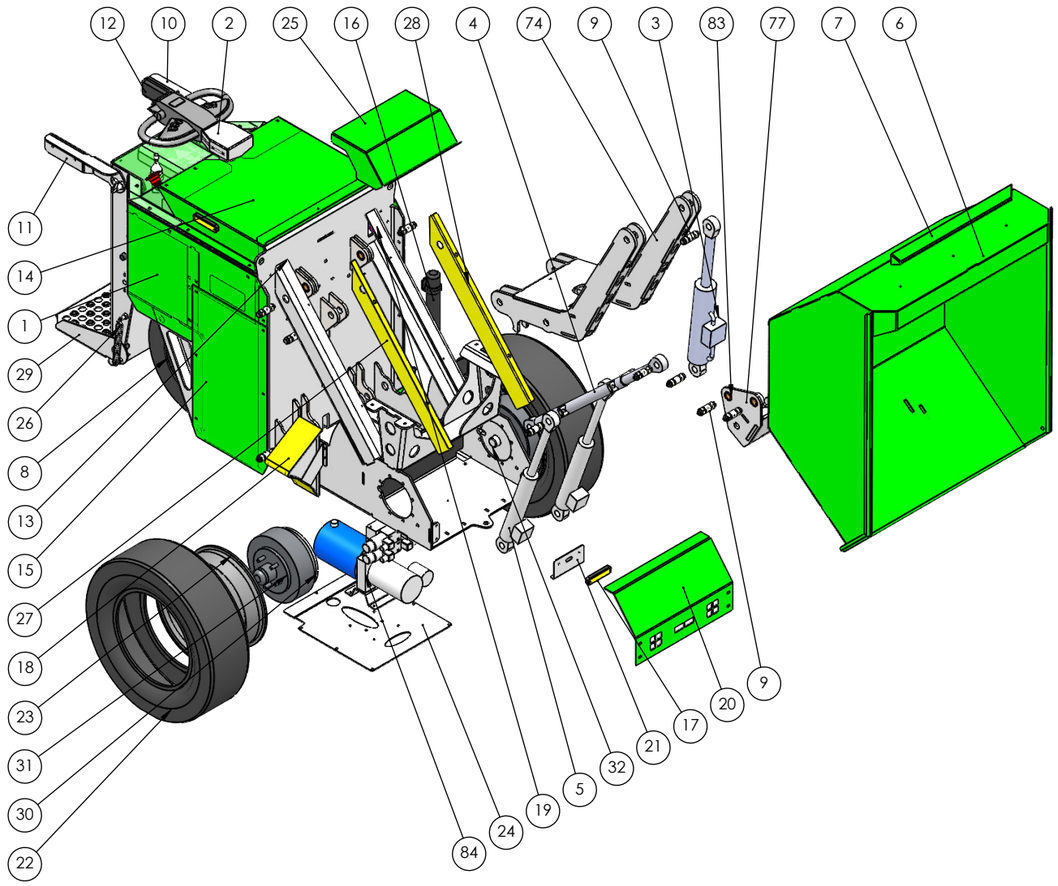

ITEM NO.	PART NUMBER	DESCRIPTION	QTY.
1	E1016-2007	Side Panel Assy (RHS)	1
2	E1016-5601	Steering Assembly	1
3	E1016-2511	Tilt Hyd. Cylinder Assy.	1
4	E1016-2516	Turn buckle	1
5	E1016-2513	Hyd. Lift Cylinder Assy (No Limit)	1
6	E1016-5101	Bucket Assembly	1
7	E1016-1118	Deflector Strip	1
8	E1016-3002	Vertical electric wheels EBy570.000C-B	1
9	E1016-5008	Tapertd Locking Collar/Shaft Set	14
10	E1016-2013	Safety Bar (LHS) Weldment	1
11	E1016-2012	Safety Bar (RHS) Weldment	1
12	E1016-1073	Safety Arm Buffer	2
13	E1016-5001	Chassis Weldment	1
14	E1016-1522	Top Cover Plate	1
15	E1016-1401	Battery Box Front Plate	2
16	01-473C	Manual Holder Tube (Autotech Int.)	1
17	SM-SL012	Beacon light flash - Amber SM-SL012	3
18	ALKO-Wheel Chock	Wheel Choc	1
19	E1516-3003	LED Light Unit	1
20	E1016-1031	Plate Bumper	1
21	E1016-1077	Front Strobe Light Bkt	1
22	E1016-2517	Front Tyre (Trelleborg SK800 27x8.5-15)	2
23	E1016-1053	Front Wheel Rim	2
24	E1016-1033	Valve Block Plate	1
25	E1016-1045	Hydraulic Pump Cover	1
26	E1016-2519	Step - Tension Spring	2
27	E1016-1529	Front Inclined Brace Cover Right	1
28	E1016-1528	Front Inclined Brace Cover Left	1
29	E1016-1013	Step Rear	1
30	E1016-1660	Brake Flange Plate	2
31	E1016-1537	Front Brake Drum	2
32	E1016-1653	Existing Stub Shaft	2
33	E1016-1535	Controller Compartment (LHS)	1
34	E1016-1536	Controller Compartment (RHS)	1
35	E1016-3004	Curtis Joystick	1
36	E1016-2508	Rubber Buffer M5x25x16	2
37	E1016-3006	EXM module	1
38	E1016-3007	1222 electric steering	1
39	E1016-3008	SW80 - 1674 DC Contactor	1
40	E1016-3009	Junction Box	1
41	vaf11150	Battery Charge Level Guage	1
42	42464	60mm Dia E Stop	1
43	22232_01	Toggle Switch	1
44	E1016-1056	Contactor Mount Bkt.	2
45	E1016-3012	Mega Fuse / Contactor	3
46	1234SE	Controler	1
47	E1016-1526	Trapezoid Box	1
48	E1016-1076	Side Arm Pad Plate	1
49	IFS206-	Proximity Switch	1
50	E1016-2520	Rubber Buffer M8x40x10	2
71	M8 Washer	Washer	2
72	M12 Washer	Washer	2
73	E1016-1303	Lift Arm Spacer	1
74	E1016-1301	Lift Arm Plate	4
75	E1016-1302	Lift Arm Brace	8
76	E1016-1304	Lift Arm Brace	2
77	E1016-1203	Crank Outer Leaf	2
78	E1016-1202	Crank Inner Leaf	2
79	E1016-1206	Crank Boss	4
80	E1016-1204	Crank Stiffener Plate	1
81	E1016-1207	Crank Rear Plate	1
82	E1016-1208	Crank Lower Plate	1
83	E1016-Bush 25x35x1.5	BUSH c/w SHOLDER 25x35x1.5	8
84	Vibo Power pack	Hydraulic Pump	1
85	ViboManifoldSpacer		1
86	VIBO ValveManifold		2
87	VIBOSolenoidValve		2
88	E1016-1046	VIBO Mounting Bracket	1
89	E1016-3003	Rear LED Lamp	1

ED1000 Electric Dumper exploded rear view parts list

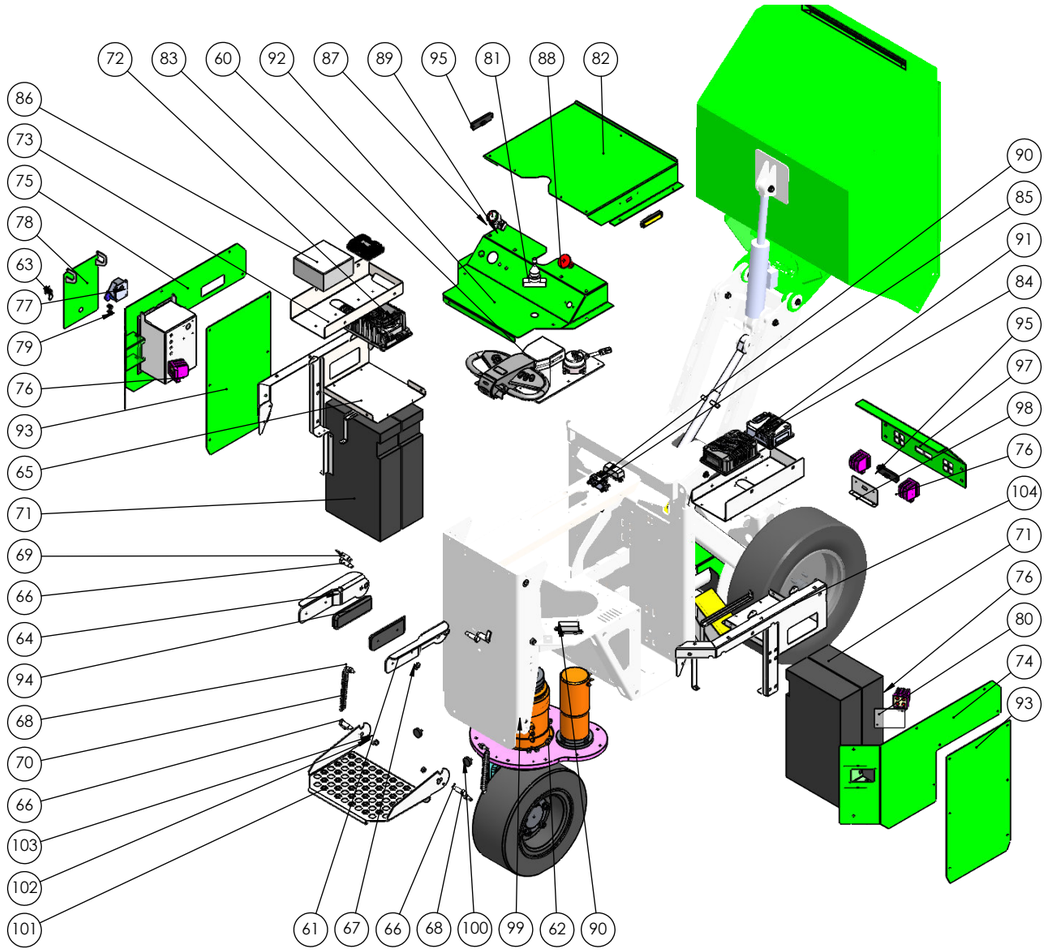

ITEM NO.	PART NUMBER	DESCRIPTION	QTY.
60	E1016-5601	Steering Assembly	1
61	E1016-2012	Safety Bar (RHS) Weldment	1
62	E1016-3002	Vertical electric wheels EBv570.000C-B	1
63	KILIT_3	Charging Panel Lock	1
64	E1016-2013	Safety Bar (LHS) Weldment	1
65	E1016-1502	Fence Top Right	1
66	E1016-1036	Pivot Bolt, Step and Safety Bar	4
67	E1016-1037	Washer Nylon Step/Safety Bar Pivot	4
68	E1016-1020	Step Spring Post	4
69	E1016-2506	Cam Index Plunger 12mm	2
70	E1016-2519	Step - Tension Spring	2
71	Battery-200Amp	NSB/210FT BLUE+	4
72	DeltaQ IC1200-A1	Delta Q - Battery Charger	1
73	E1016-1535	Controller Compartment (LHS)	1
74	E1016-1523	Rear Chamfer Panel (RHS)	1
75	E1016-1524	Rear Chamfer Panel (LHS)	1
76	E1016-3003	Rear LED Lamp	3
77	220V PEW163CS	220V Socket-angle_box	1
78	E1016-1067	Charging Box - Door	1
79	4568	Data Plug	2
80	E1016-1119	Clear glass for Rear Lights	2
81	E1016-3004	Curtis Joystick	1
82	E1016-1522	Top Cover Plate	1
83	E1016-3006	EXM module	1
84	E1016-3007	1222 electric steering	1
85	E1016-3008	SW80 - 1674 DC Contactor	1
86	E1016-3009	Junction Box	1
87	vaf11150	Battery Charge Level Guage	1
88	42464	60mm Dia E Stop	1
89	22232_01	Toggle Switch	1
90	E1016-3012	Mega Fuse / Contactor	3
91	1234SE	Controler	1
92	E1016-1526	Trapezoid Box	1
93	E1016-1401	Battery Box Front Plate	2
94	E1016-1073	Safety Arm Buffer	2
95	SM-SL012	Beacon light flash - Amber SM-SL012	3
96	E1516-3003	LED Light Unit	1
97	E1016-1031	Plate Bumper	1
98	E1016-1077	Front Strobe Light Bkt	1
99	IFS206-	Proximity Switch	1
100	E1016-2520	Rubber Buffer M8x40x10	2
101	E1016-1013	Step Rear	1
102	M8 Lock Nut	Lock Nut	2
103	M12 Lock Nut	_M12 Lock Nut	2
104	E1016-1501	Fence Top Right	1
138	M8 Washer	Washer	2
139	M12 Washer	Washer	2
140	E1016-1303	Lift Arm Spacer	1
141	E1016-1301	Lift Arm Plate	4
142	E1016-1302	Lift Arm Brace	8
143	E1016-1304	Lift Arm Brace	2
144	E1016-1203	Crank Outer Leaf	2
145	E1016-1202	Crank Inner Leaf	2
146	E1016-1206	Crank Boss	4
147	E1016-1204	Crank Stiffener Plate	1
148	E1016-1207	Crank Rear Plate	1
149	E1016-1208	Crank Lower Plate	1
150	E1016-Bush 25x35x1.5	BUSH c/w SHOLDER 25x35x1.5	8
151	Vibo Power pack	Hydraulic Pump	1
152	ViboManifoldSpacer		1
153	VIBO ValveManifold		2
154	VIBOSolenoidValve		2
155	E1016-1046	VIBO Mounting Bracket	1

steering assembly tiller head parts list

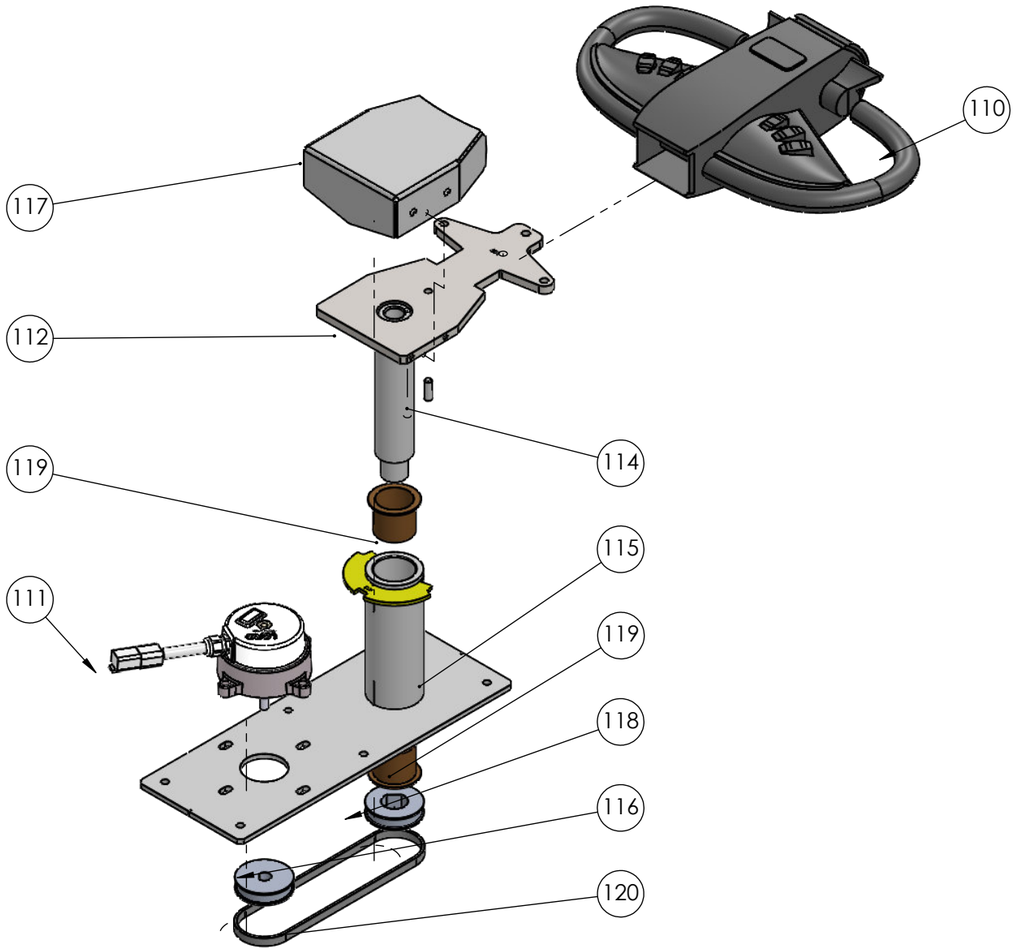

ITEM NO.	PartNo	DESCRIPTION	QTY.
110	E1016-2502	Temo 200 Steering Tiller Head	1
111	E1016-2505	Lord Steering Damper	1
112	E1016-1610	Temo 200 Mounting Plate	1
114	E1016-1608	Steering Stop Pin	1
115	E1016-1601	Steering Flange Plate	1
116	E1016-2504	Steering Pulley Lord	1
117	E1016-1607	Steering Cover	1
118	E1016-2503	Steering Pulley Tiller	1
119	E1016-Bush 44x40x2	Flange Bush 44x40x2mm	2
120	E1016-2518	Tiller Timeing Belt	1
121	E1016-1602	Steering Outer Tube	1
122	E1016-1606	Steering Stop Plate	1

Operators platform and safety arm parts list

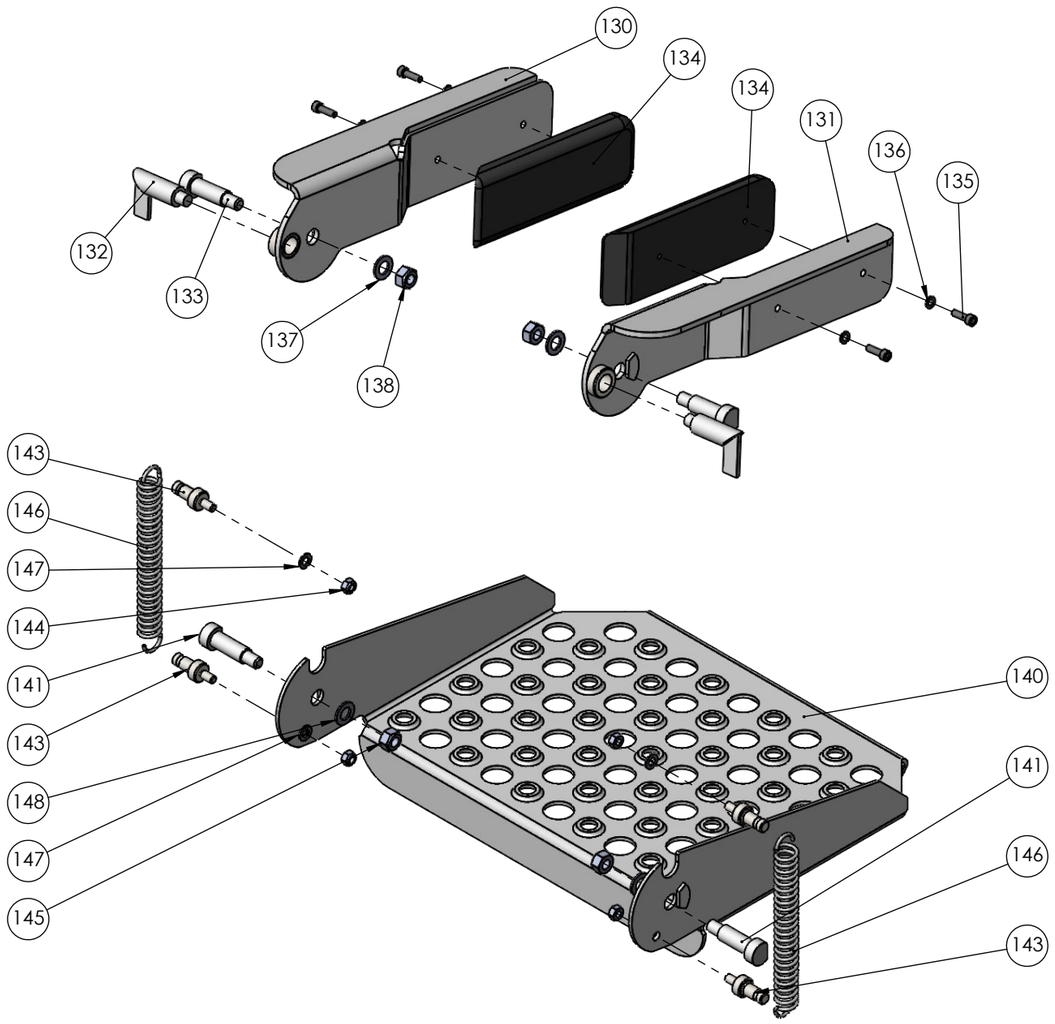

6. TECHNICAL DATA
ED1000 Parts list

Operators platform and safety arm parts list

Operators platform

ITEM NO.	PART NUMBER	DESCRIPTION	QTY.
140	E1016-1013	Step Rear	1
141	E1016-1036	Pivot Bolt, Step and Safety Bar	2
143	E1016-1020	Step Spring Post	4
144	M8 Lock Nut	Lock Nut	4
145	M12 Lock Nut	M12 Lock Nut	2
146	E1016-2519	Step - Tension Spring	2
147	M8 Washer	Washer	4
148	M12 Washer	Washer	2

Safety rail

130	E1016-2012	Safety Bar (RHS) Weldment	1
131	E1016-2013	Safety Bar (LHS) Weldment	1
132	E1016-2506	Cam Index Plunger 12mm	2
133	E1016-1036	Pivot Bolt, Step and Safety Bar	2
134	E1016-1073	Safety Arm Buffer	2
135	M6 x 20 Socket Head Screw	Socket Head Screw	4
136	M6 Washer	Washer	4
137	M12 Washer	Washer	2
138	M12 Lock Nut	M12 Lock Nut	2

Tiller head parts list

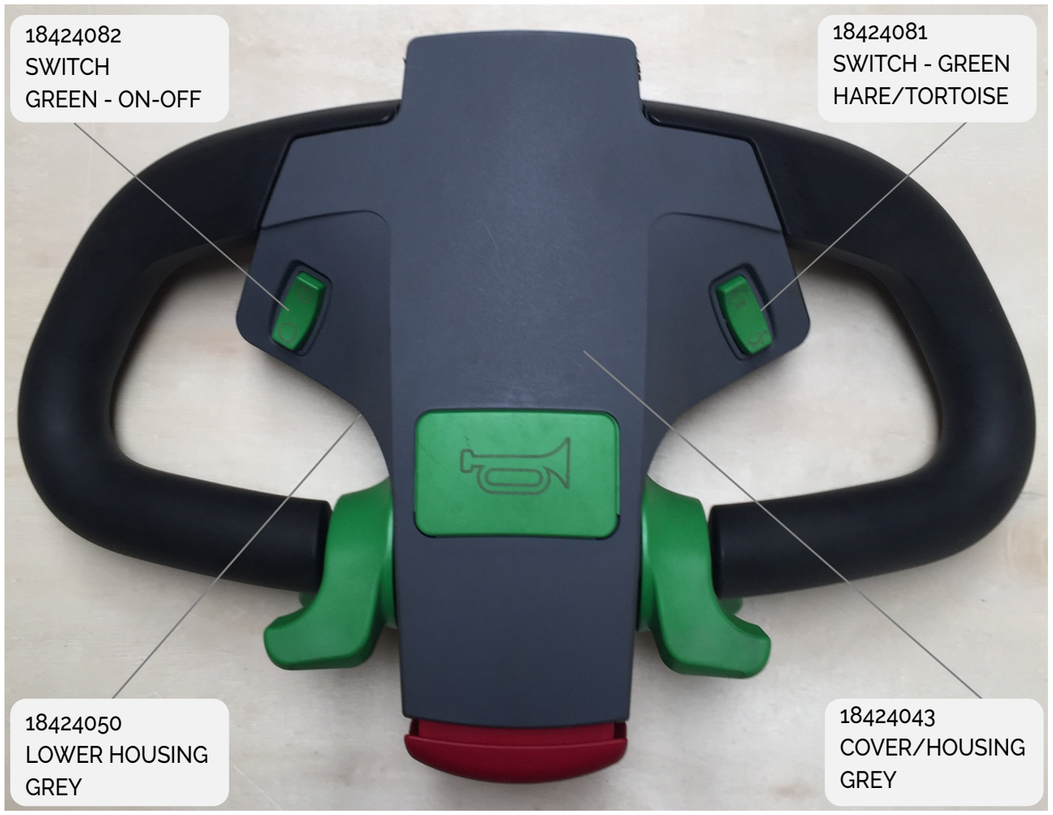

6. TECHNICAL DATA
ED1000 Parts list

Hydraulic system parts list

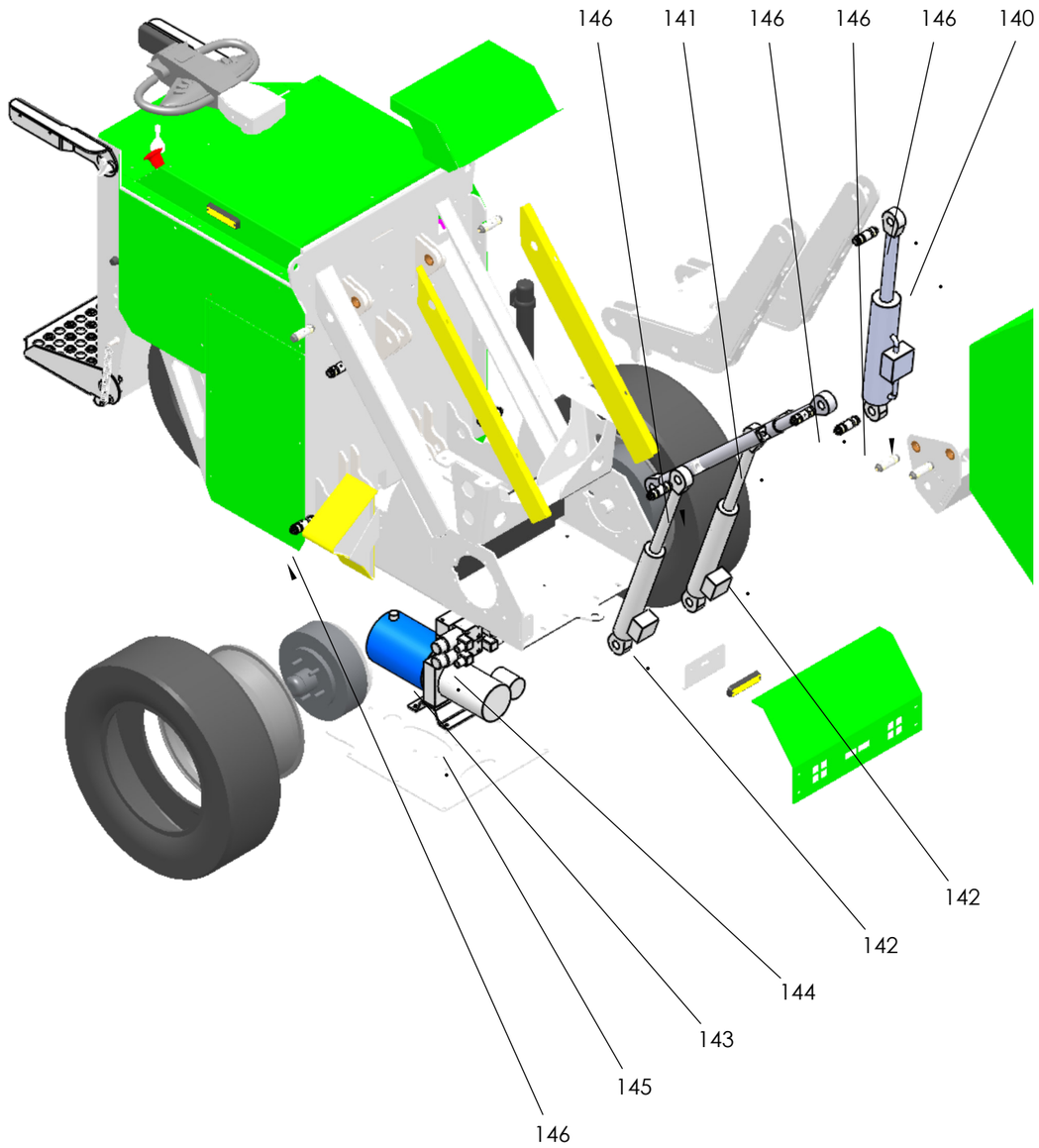

Hydraulic system parts list

ITEM NO.	PART NUMBER	DESCRIPTION	QTY.
140	E1016-2511	Tilt Hyd. Cylinder Assy.	1
141	E1016-2516	Turn buckle	1
142	E1016-2512	Hyd. Lift Cylinder assy	1
143	Vibo Power pack	Hydraulic Pump	1
144	VIBOSolenoidValve		2
145	E1016-1046	VIBO Mounting Bracket	1
146	E1016-5008	Tapertd Locking Collar/Shaft Set	14
147	E1016-2515	Set of Hydraulic Hoses for E1016	1
229	E1016-3003	Rear LED Lamp	1

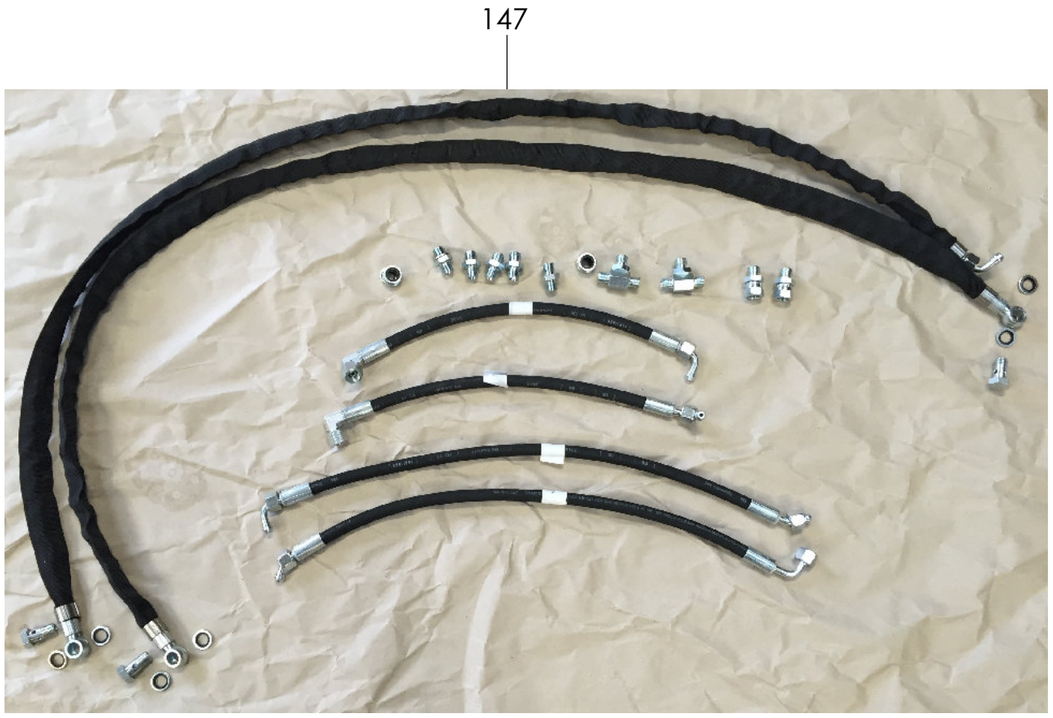

Electrical system parts list

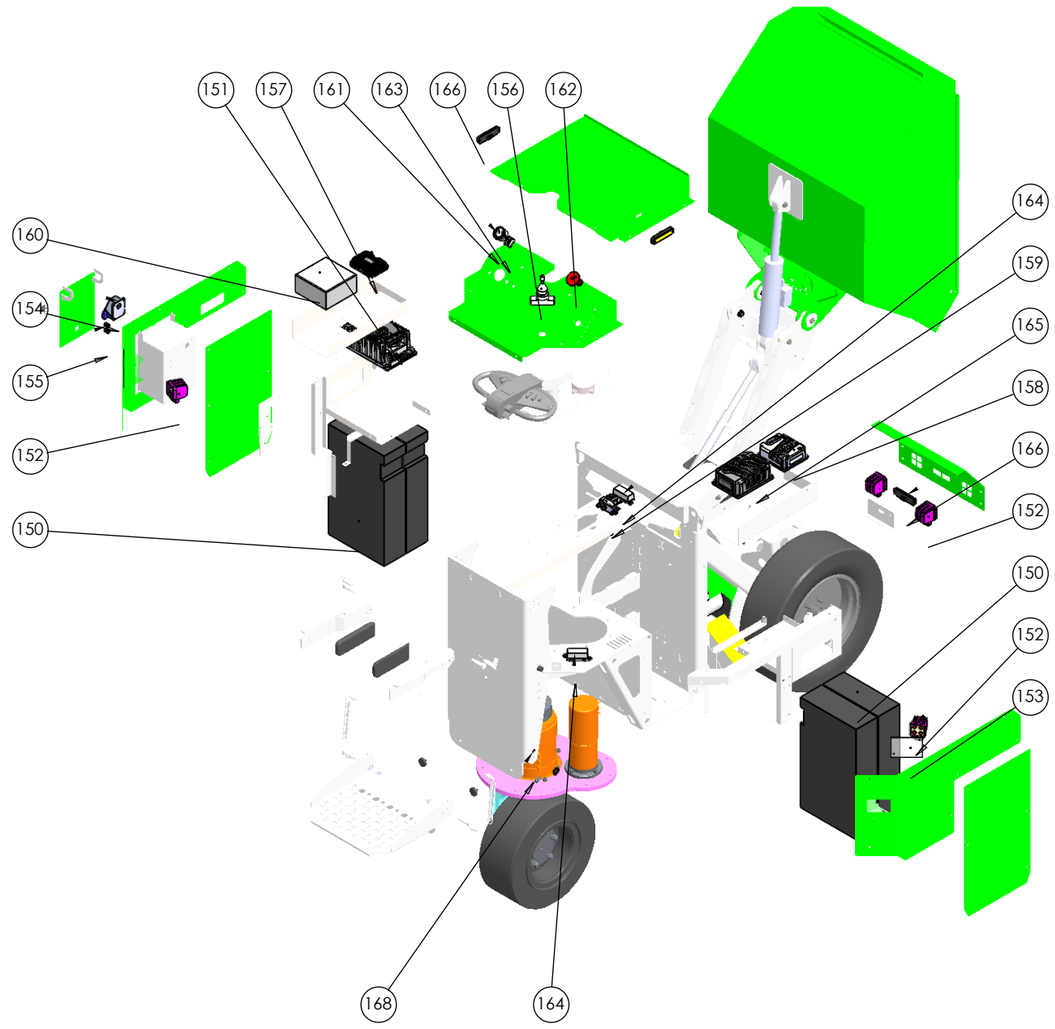

Electrical system parts list

ITEM NO.	PART NUMBER	DESCRIPTION	QTY.
150	Battery-200Amp	NSB/210FT BLUE+	4
151	DeltaQ IC1200-A1	Delta Q - Battery Charger	1
152	E1016-3003	Rear LED Lamp	3
153	E1016-1119	Clear glass for Rear Lights	2
154	220V PEW163CS	220V Socket-angle_box	1
155	4568	Data Plug	2
156	E1016-3004	Curtis Joystick	1
157	E1016-3006	EXM module	1
158	E1016-3007	1222 electric steering	1
159	E1016-3008	SW80 - 1674 DC Contactor	1
160	E1016-3009	Junction Box	1
161	vaf11150	Battery Charge Level Guage	1
162	42464	60mm Dia E Stop	1
163	22232_01	Toggle Switch	1
164	E1016-3012	Mega Fuse / Contactor	3
165	1234SE	Controler	1
166	SM-SL012	Beacon light flash - Amber SM-SL012	3
167	E1516-3003	LED Light Unit	1
168	IFS206-	Proximity Switch	1
169	E1016-315	Wireing loom	1

169

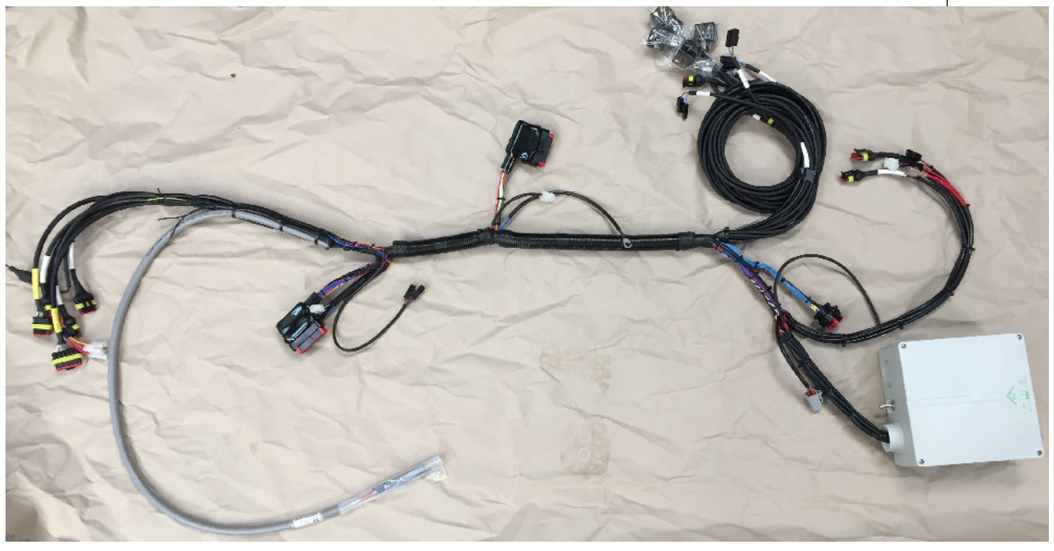

6. TECHNICAL DATA
ED1000 Parts list

Drive unit parts list

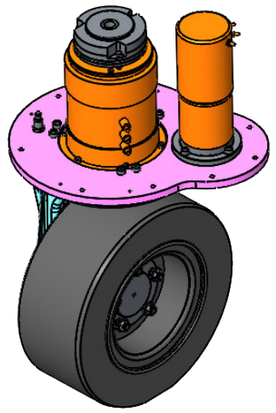

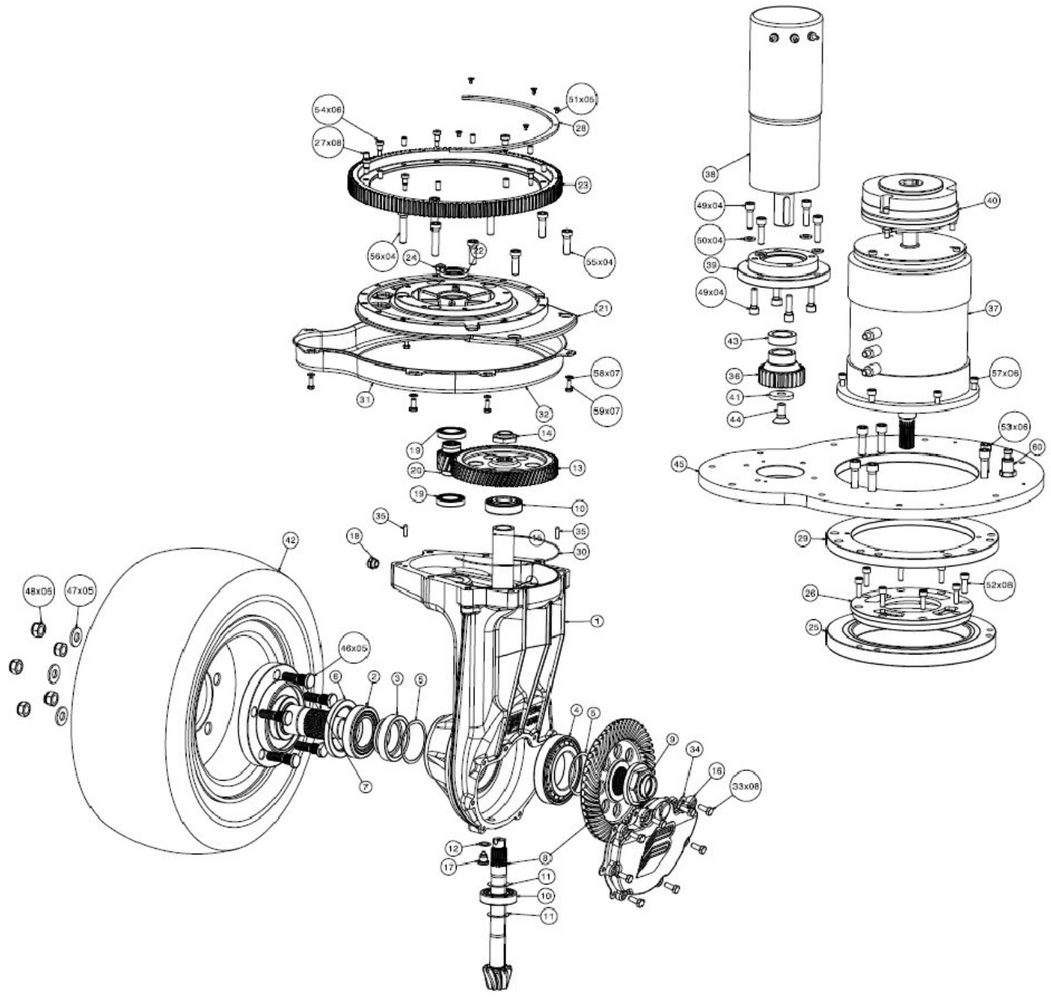

Drive unit parts list

Pos	Q.ta	Part number	Description
1	1	570.0001.00.A	Body Casting
2	1	313054	Tapered Roller Bearing
3	1	350.004.00-A	Wheel Bearing Spacer
4	1	313055	Roller Bearing
5	2	350.0003.00	Shim 76x65x0 3mm
6	1	601196	Sealing Ring AS-75x100x10
7	1	475.0049.00-E	Wheel Flange
8	1	570.0002.00	Bevel
9	1	475.0109.00-A	Collar Nut m36x2
10	2	313056	Roller bearing
11	2	250.0007.00	Shim
12	2	“	Shim
13	1	400.0006.00-A	Ring Gear
14	1	230.0007.00-A	Collar Nut m20 x 1.5
15	1	570.0009.00-A	Bearing spacer pinion
16	1	350.0019.00-A	Rear Cover
17	1	744037	Sump plug
18	1	744030	Oil Level Plug m14 x 1.5
19	2	313057	Ball Bearing
20	1	400.0009.00-B	Steering Motor Gear
21	1	400.0011.00-B	Pivot Bearing
22	1	801199	Seal 30x47x7
23	1	570.0005.00-A	Steering Ring Gear
24	1	744021	Breather Plug m14 x 1.5
25	1	3130004	Bearing
26	1	475.0050.00-B	Fixed Motor Bracket
27	8	503009	Dowel Pins 8 x 16
28	1	570.0033.00	Sensor Position Plate
29	1	475.0032.00B	Motor Mounting Flange
30	1	300112	Sealing Gasket
31	1	570.0022.00	Crankcase Left
32	1	570.0029.00	Crankcase Right
33	8	430808	Bolt M8 x 30mm
34	8	“	Bolt M8 x 30mm
35	2	530600	Dowel Pin 8 x 20
36	1	504011300	Steering Gear
37	1	570.0026.00	Traction Motor 24v
38	1	4008.0047.00	Steering Gearbox 24v
39	1	4008.0058.00	Steering Flange Plate
40	1	570.0031.00	Em Brake 75nm 24v
41	1	417.0052.00	Steering Motor Washer
42	1	570.0012.00	Tire 21 x 8 x 9
43	1	475.0020.00	Steering Motor Spacer
44	1	421216	Bolt m12 x 30mm
45	1	570.0032.00	Banjo Plate
46	5	345011400-B	Wheel Studs
47	5	440710	Washer 15 x 32 x 3
48	5	501404	Wheel Nuts m14 x 1.5
49	8	401024	Allen Head Bolts m10 X 35mm
50	4	430425	Spring Washer 5 x 20 x 2
51	5	421005	Bolt m8 x 25mm
52	8	430425	Allen Head Bolt m8 x 25mm
53	8	401204	“ “ “ m12 x 50
54	6	481029	Collar Bolt m6 x 10mm
55	4	401233	Allen Head Bolt m12 x 35mm
56	4	401232	“ “ “ m12 x 50mm
57	6	400902	“ “ “ m8 x 20mm
58	7	440501	External Washer 5.5 x 9 x 0.5
59	7	430602	Bolt m6 x 16mm
60	1	600121	Homing Sensor m18 x 1

ED 1500 ELECTRIC DUMPER

ED 1500 Electric Dumper exploded front view parts list

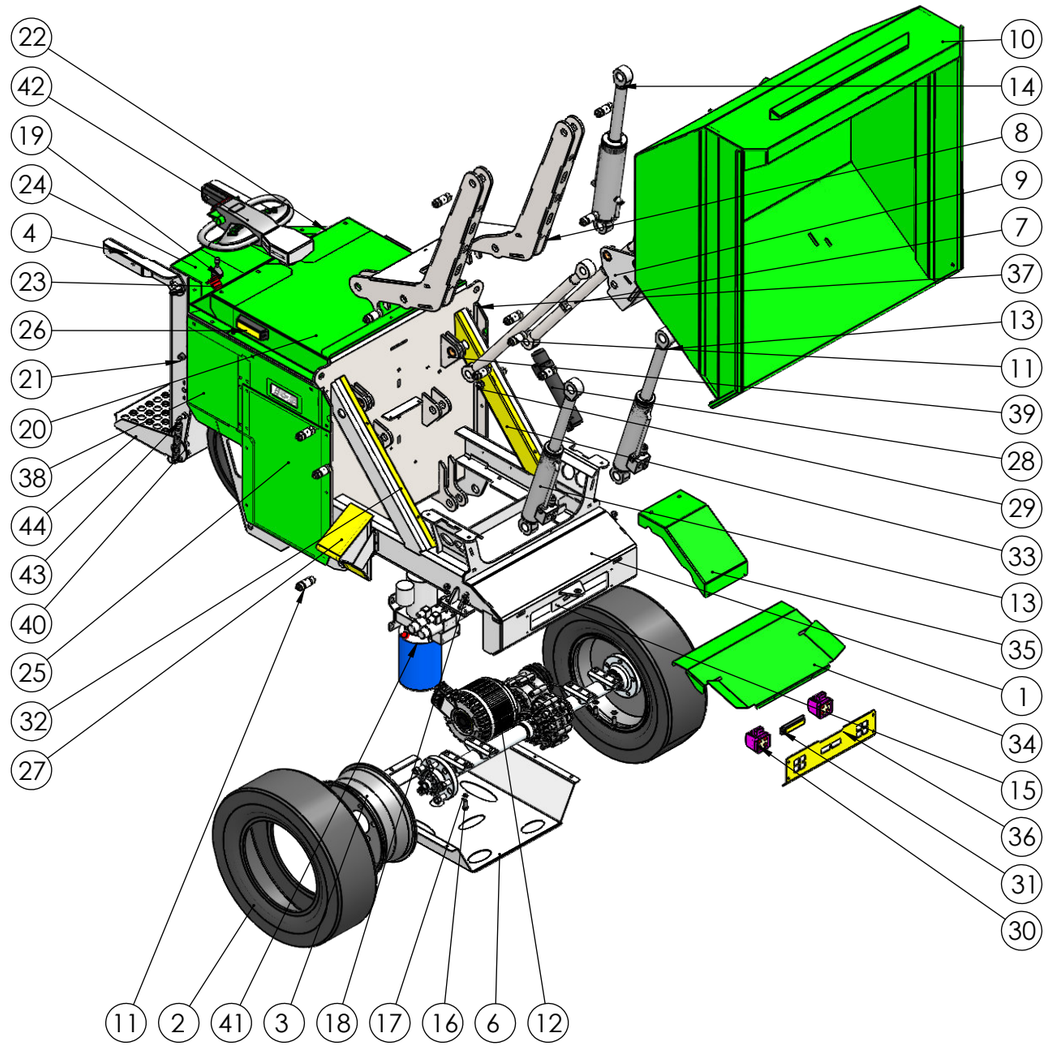

ITEM NO.	PART NUMBER	DESCRIPTION	Front End BOM/QTY.
1	E1516-5001	Chassis Weldment	1
2	E1516-2517	EVO-0151 Front Tyre (Trelleborg SK800 27x8.5-15)	2
3	E1516-1053	Front Wheel Rim	2
4	E1516-5009	Safety Arm (RHS)	1
5	E1516-1037	Washer Nylon Step/Safety Bar Pivot	2
6	E1516-1033	Under Belly Plate	1
7	E1516-5006	Turn Buckle	2
8	E1516-5301	Lift Arms Assembly	1
9	E1516-5201	Crank Assembly	1
10	E1516-5101	Bucket Assembly	1
11	E1516-5008	Tapered Locking Collar/Shaft Set	16
12	OF151124EC01	Drive Axle c/w Motor	1
13	E1516-2512_asm	Hyd Cylinder - Arm lift	2
14	E1516-2511_asm	Hyd Cylinder - Tilt lift	1
15	E1516-1077	Front Strobe Light Bkt	1
16	M12 x 30 Hex Head Screw	M12 x 30 Hex Head Screw	4
17	M12 SPRING WASHER		8
18	M12 Lock Nut	M12 Lock Nut	4
19	E1516-3004	Curtis Joystick	1
20	E1516-1522	Top Cover Plate	1
21	E1516-2508	Rubber Buffer M5x25x16	2
22	vaf11150	Battery Charge Level Guage	1
23	42464	60mm Dia E Stop	1
24	E1516-1540	Control Consol	1
25	E1516-1401	Battery Box Front Plate	2
26	SM-SL012	Beacon light flash - Amber SM-SL012	2
27	ALKO-Wheel Chock	Wheel Choc	1
28	01-473C	Manual Holder Tube (Autotech Int.)	1
29	IFS206-	Proximity Switch	2
30	E1516-3003	LED Light Unit	2
31	SM-SL012-Rev2	Beacon light flash - Amber SM-SL012	1
32	E1516-1529	Front Inclined Brace Cover Right	1
33	E1516-1528	Front Inclined Brace Cover Left	1
34	E1516-1082	Motor Cover	1
35	E1516-1045	Hydraulic Pump Cover	1
36	E1516-1031	Plate Bumper	1
37	E1516-1524	Rear Chamfer Panel (LHS)	1
38	E1516-1523	Rear Chamfer Panel (RHS)	1
39	E1516-Bush 25x35x1.5	BUSH c/w SHOLDER 30x40x2x17.5	4
40	E1516-2501	Washers Steel	4
41	E1516-2510	Vibo Hydraulic Power pack	1
42	E1516-5601	Steering Assembly	1
43	E1516-1020	Step Spring Post	2
44	E1516-5011	Driver Rear Step Assy	1

ED1500 Electric Dumper exploded rear view parts list

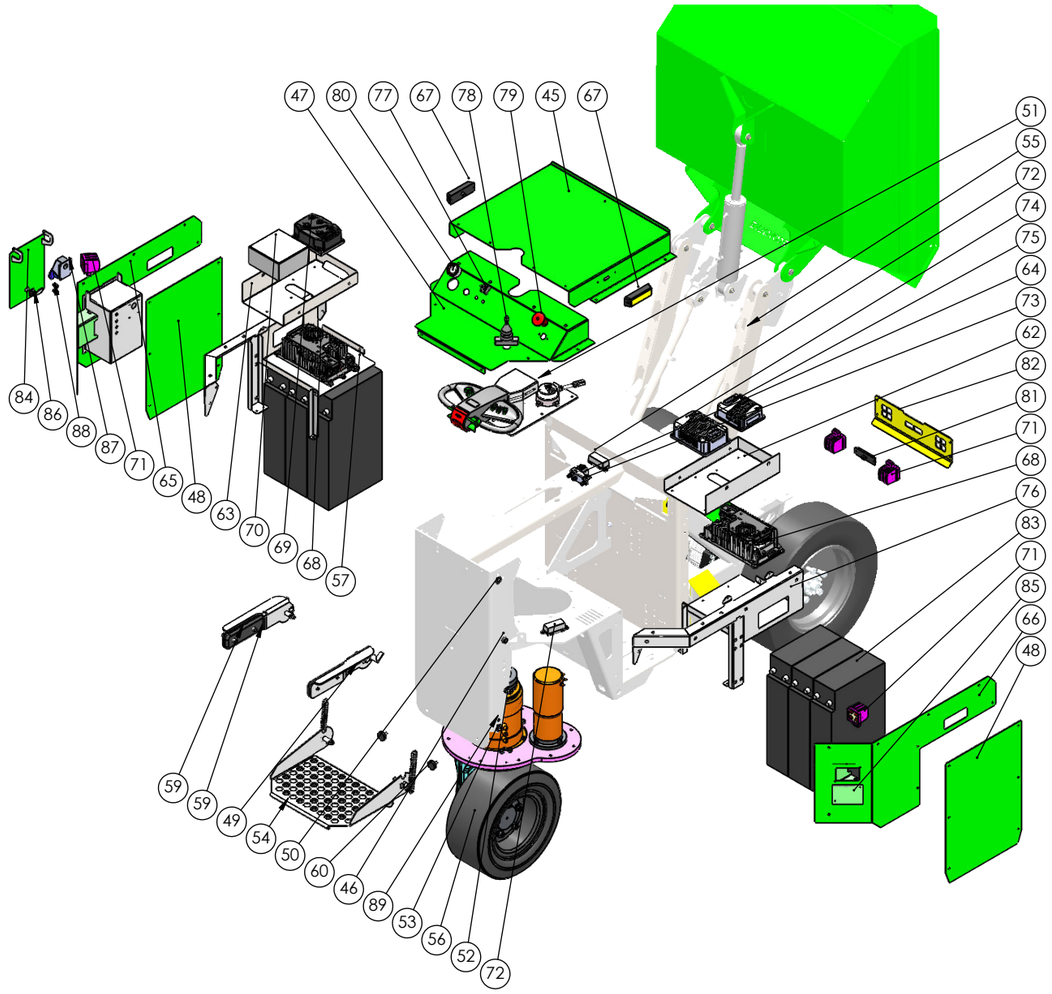

ITEM NO.	PART NUMBER	DESCRIPTION	Rear End BOM/QTY.
45	E1516-1522	Top Cover Plate	1
46	E1516-2508	Rubber Buffer M5x25x16	2
47	E1516-1540	Control Consol	1
48	E1516-1401	Battery Box Front Plate	2
49	E1516-5009	Safety Arm (RHS)	1
50	E1516-2501	Washers Steel	4
51	E1516-5601	Steering Assembly	1
52	E1516-1020	Step Spring Post	2
53	E1516-1037	Washer Nylon Step/Safety Bar Pivot	2
54	E1516-5011	Driver Rear Step Assy	1
55	E1516-5006	Turn Buckle	2
56	E1516-3002	Vertical electric wheels EBv570.000C-B	1
57	E1516-5501	Fence Weldment (LHS)	1
58	M8 Lock Nut	Lock Nut	2
59	E1516-5009	Safety Arm (LHS)	1
60	E1516-1210	Rubber Buffer 40x10xM10x30	2
61	M10 Lock Nut	Lock Nut	2
62	E1516-1536	Controller Compartment (RHS)	1
63	E1516-1535	Controller Compartment (LHS)	1
64	E1516-1056	Contactor Mount Bkt.	2
65	E1516-1524	Rear Chamfer Panel (LHS)	1
66	E1516-1523	Rear Chamfer Panel (RHS)	1
67	SM-SL012	Beacon light flash - Amber SM-SL012	2
68	DeltaQ IC1200-A1	Delta Q - Battery Charger	1
69	OI470331232SE_A		1
70	E1516-3009	Junction Box	1
71	E1516-3003	LED Light Unit	2
72	E1516-3012	Mega Fuse / Contactor	1
73	E1516-3008	SW80 - 1674 DC Contactor	1
74	1234SE	1234SE Controler	1
75	E1516-3007	1222 electric steering	1
76	E1516-5501	Fence Weldment (RHS)	1
77	22232_01	Toggle Switch	1
78	E1516-3004	Curtis Joystick	1
79	42464	60mm Dia E Stop	1
80	vaf11150	Battery Charge Level Guage	1
81	SM-SL012-Rev2	Beacon light flash - Amber SM-SL012	1
82	E1516-1031	Plate Bumper	1
83	BATT_560x125x320		3
84	E1516-1067	Charging Box - Door	1
85	E1516-1119	Clear glass for Rear Lights	1
86	KILIT_3	Pannel Latch	1
87	220V PEW163CS	220V Socket-angle_box	1
88	4568	Coms Plug	2
89	IFS206-	Proximity Switch	1

Steering assembly and tiller head parts list

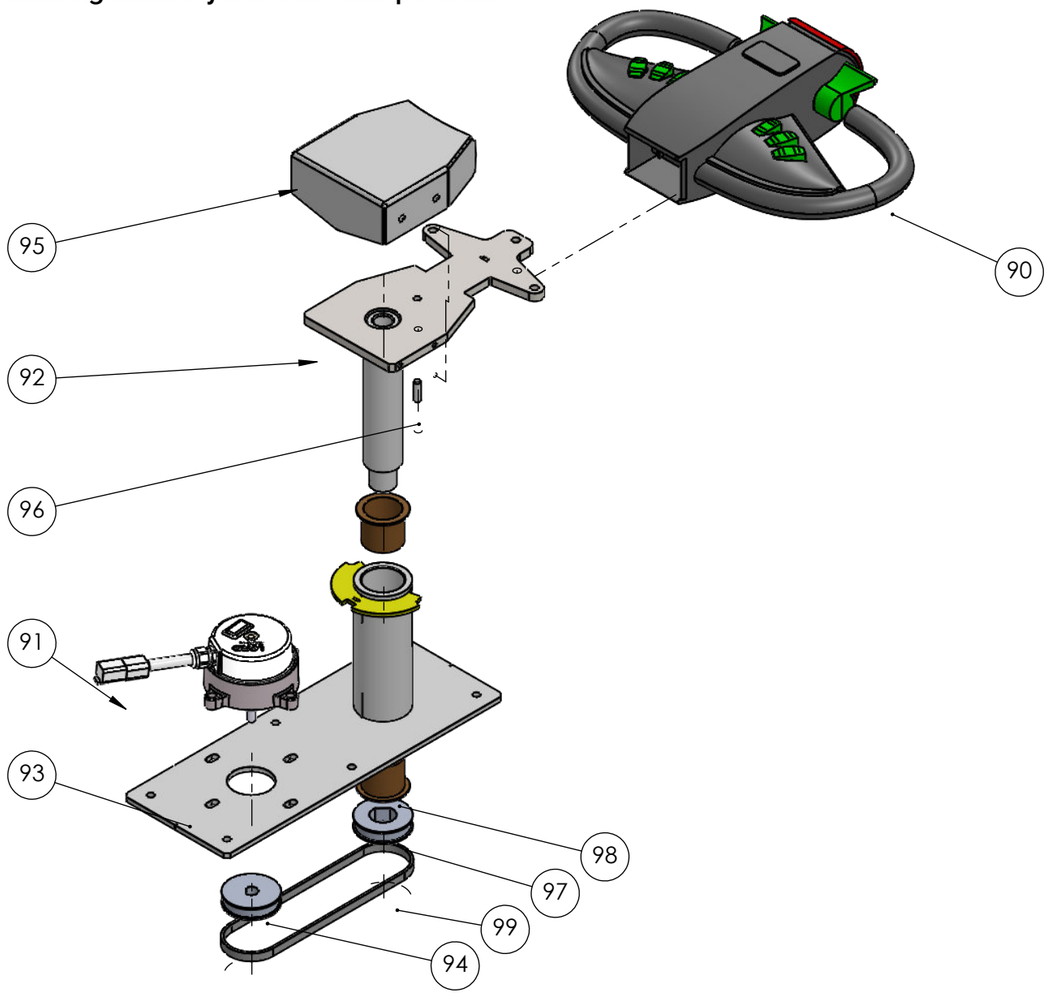

ITEM NO.	PART NUMBER	DESCRIPTION	Default /QTY.
90	E1516-2502	Temo 200 Steering Tiller Head	1
91	E1516-2505	Lord Steering Damper	1
92	E1516-1610	Temo 200 Mounting Plate	1
93	E1516-1601	Steering Flange Plate	1
94	E1516-2504	Steering Pulley Lord	1
95	E1516-1607	Steering Cover	1
96	E1516-1608	Steering Stop Pin	1
97	E1516-2503	Steering Pulley Tiller	1
98	E1516-Bush 44x40x2	Flange Bush 44x40x2mm	2
99	E1516-2518	Tiller Timeing Belt	1

Operators platform and safety rails parts list

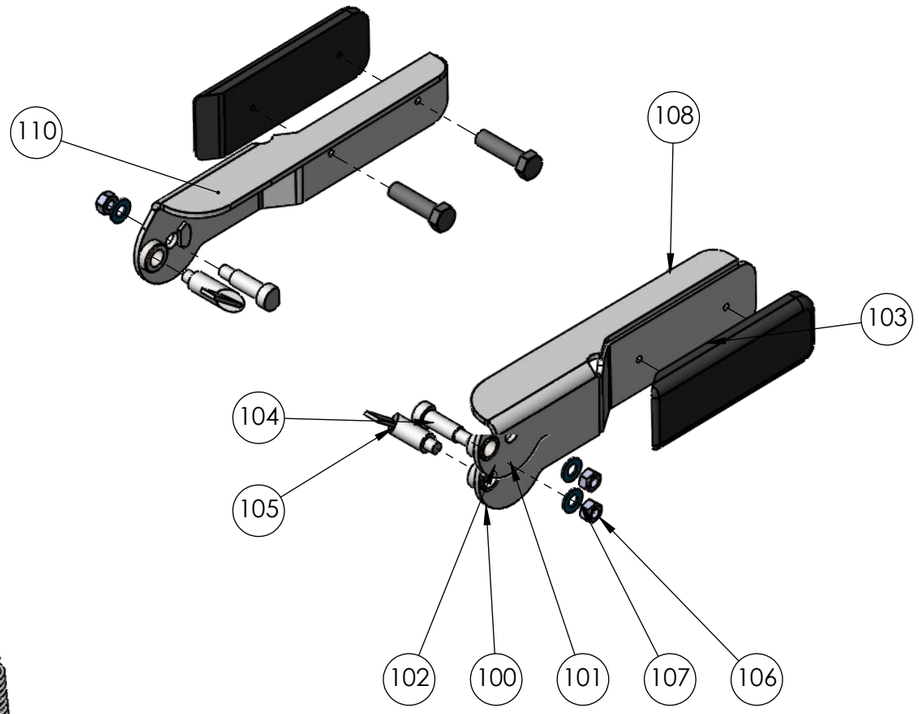

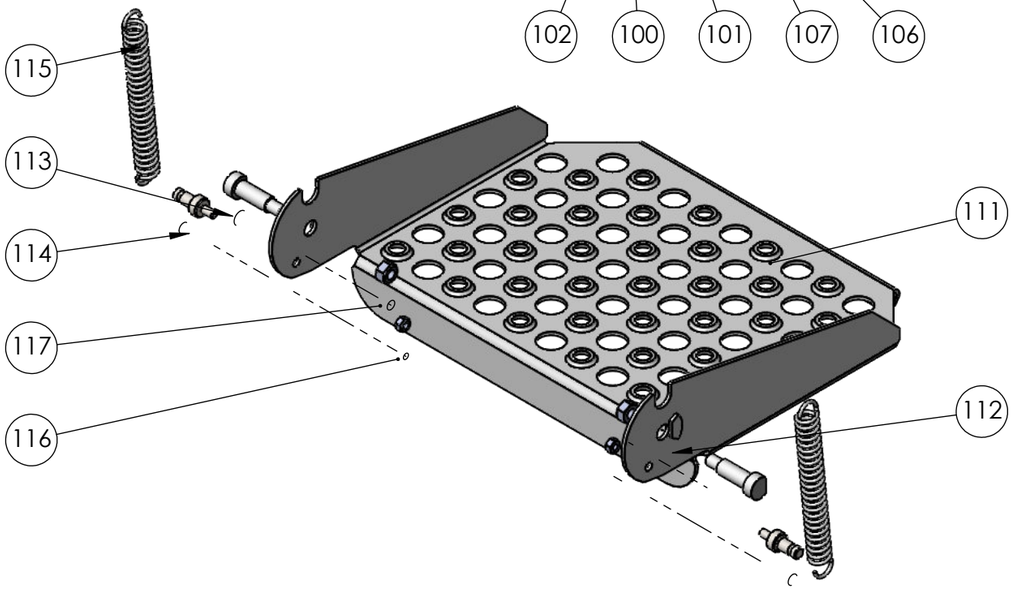

6. TECHNICAL DATA
ED1500 Parts list

Operators platform and safety rails parts list

Safety rails

ITEM NO.	PART NUMBER	DESCRIPTION	QTY.
100	E1516-1071	Safety Bar (RHS)	1
101	E1516-1042	Step D Washer	1
102	E1516-1039	Boss, Plunger, Safety Bar	1
103	E1516-1073	Safety Arm Buffer	1
104	E1516-1036	Pivot Bolt, Step and Safety Bar	1
105	E1516-2506	Cam Index Plunger 12mm	1
106	M12 Lock Nut	M12 Lock Nut	1
107	M12 Flat Washer		1
108	M6 x 20 Hex Head Screw	M6 x 20 Hex Head Screw	2
109	M6 Washer	Washer	2
110	E1516-1071-LHS		1
ITEM NO.	PART NUMBER	DESCRIPTION	QTY.

Operators platform

ITEM NO.	PART NUMBER	DESCRIPTION	QTY.
111	E1516-1013	Step Rear	1
112	E1516-1042	Step D Washer	2
113	E1516-1036	Pivot Bolt, Step and Safety Bar	2
114	E1516-1020	Step Spring Post	2
115	E1516-2519	Step - Tension Spring	2
116	M8 Lock Nut	Lock Nut	2
117	M12 Lock Nut	M12 Lock Nut	2

Tiller head parts list

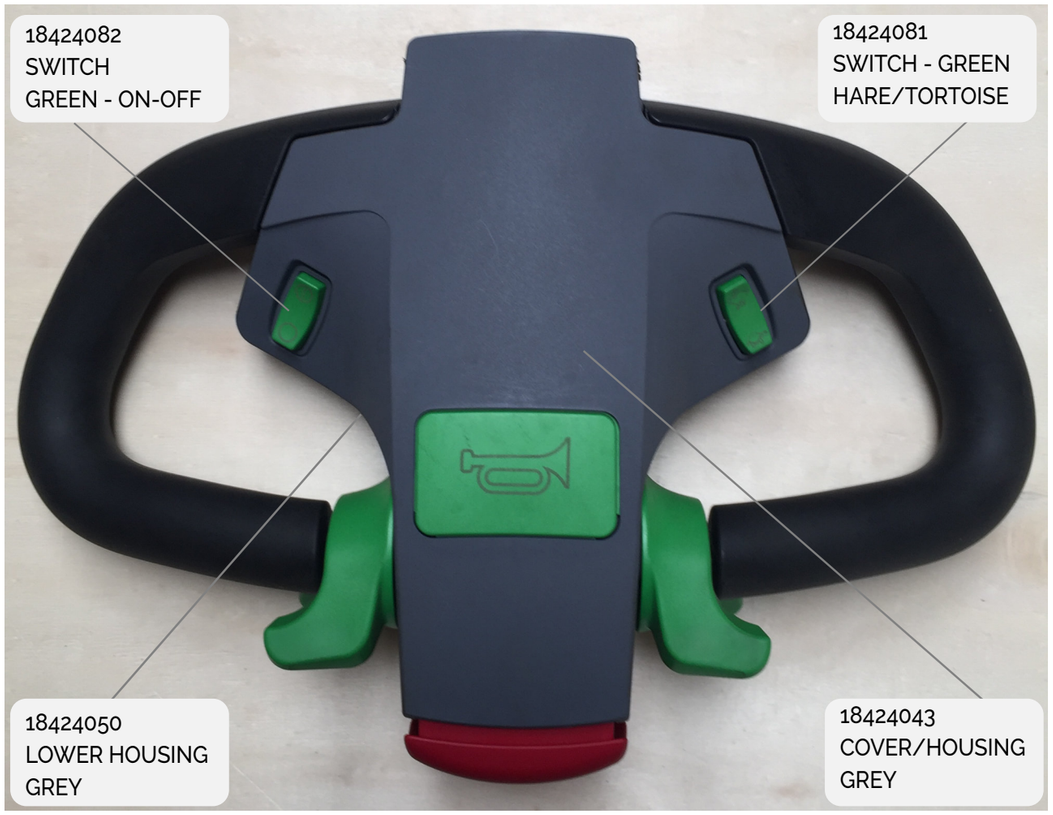

Hydraulic system parts list

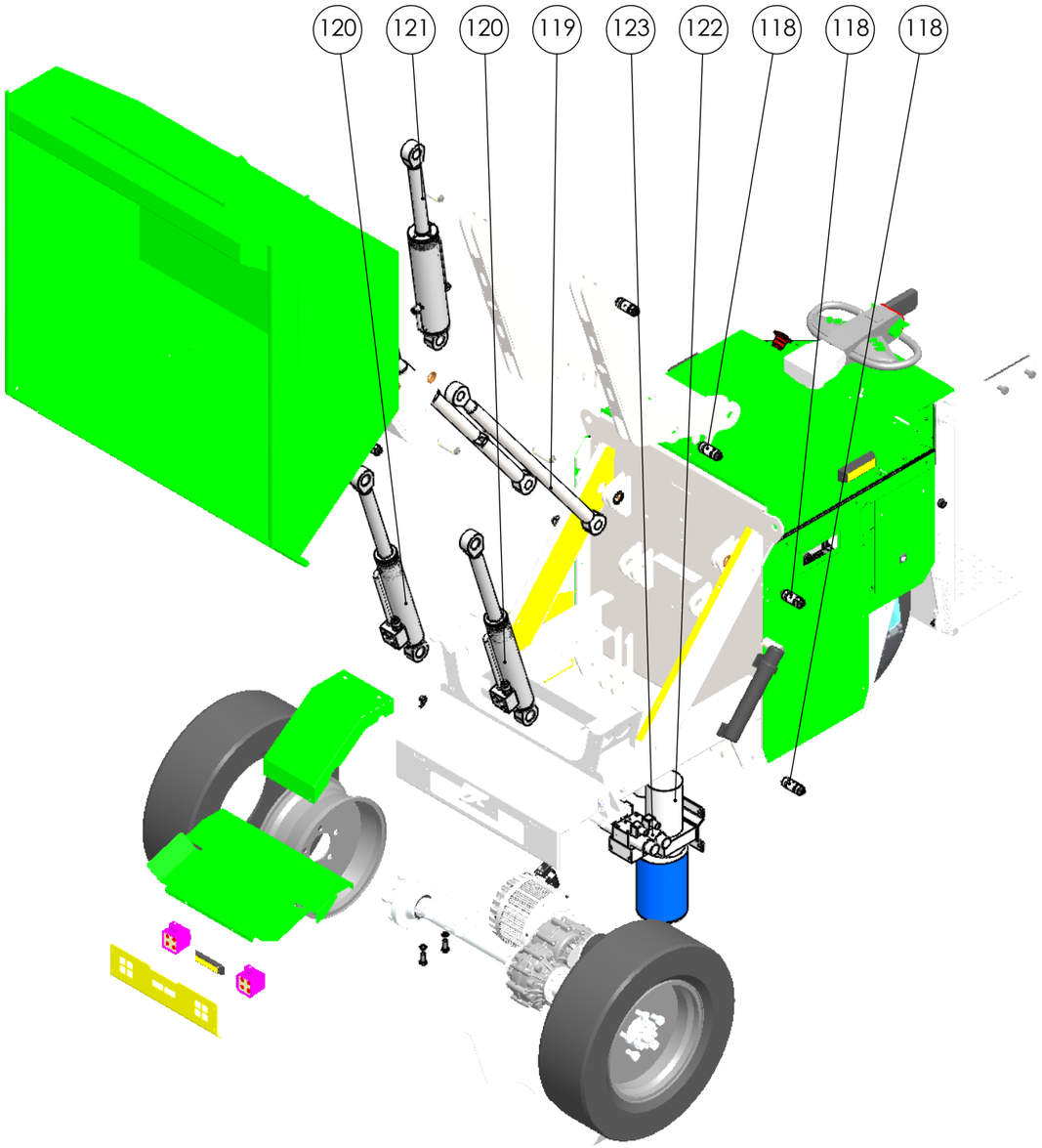

Hydraulic system parts list

ITEM NO.	PART NUMBER	DESCRIPTION	QTY.
118	E1516-5008	Tapered Locking Collar/Shaft Set	16
119	E1516-5006	Turn Buckle	2
120	E1516-2512_asm	Hyd Cylinder - Arm lift	2
121	E1516-2511_asm	Hyd Cylinder - Tilt lift	1
122	E1516-2510	Vibo Hydraulic Power pack	1
123	E1516-1090	VIBO Solenoid Valve Block	2
124	E1516-2515	SEt of Hydraulic Hoses	1

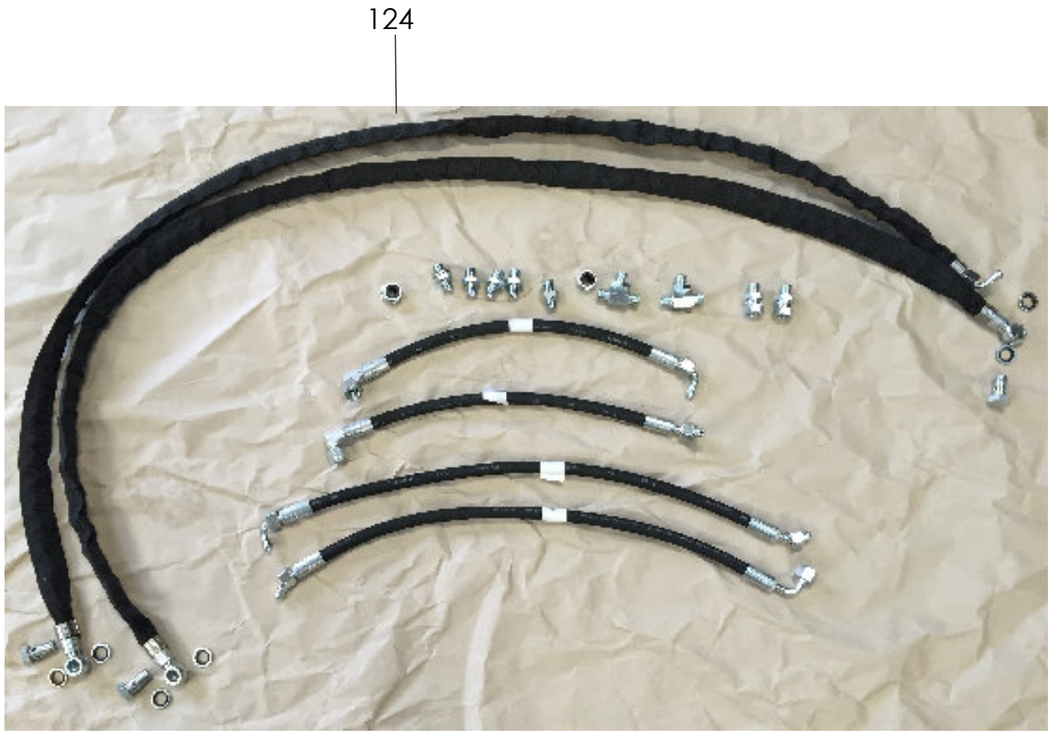

Electrical system parts list

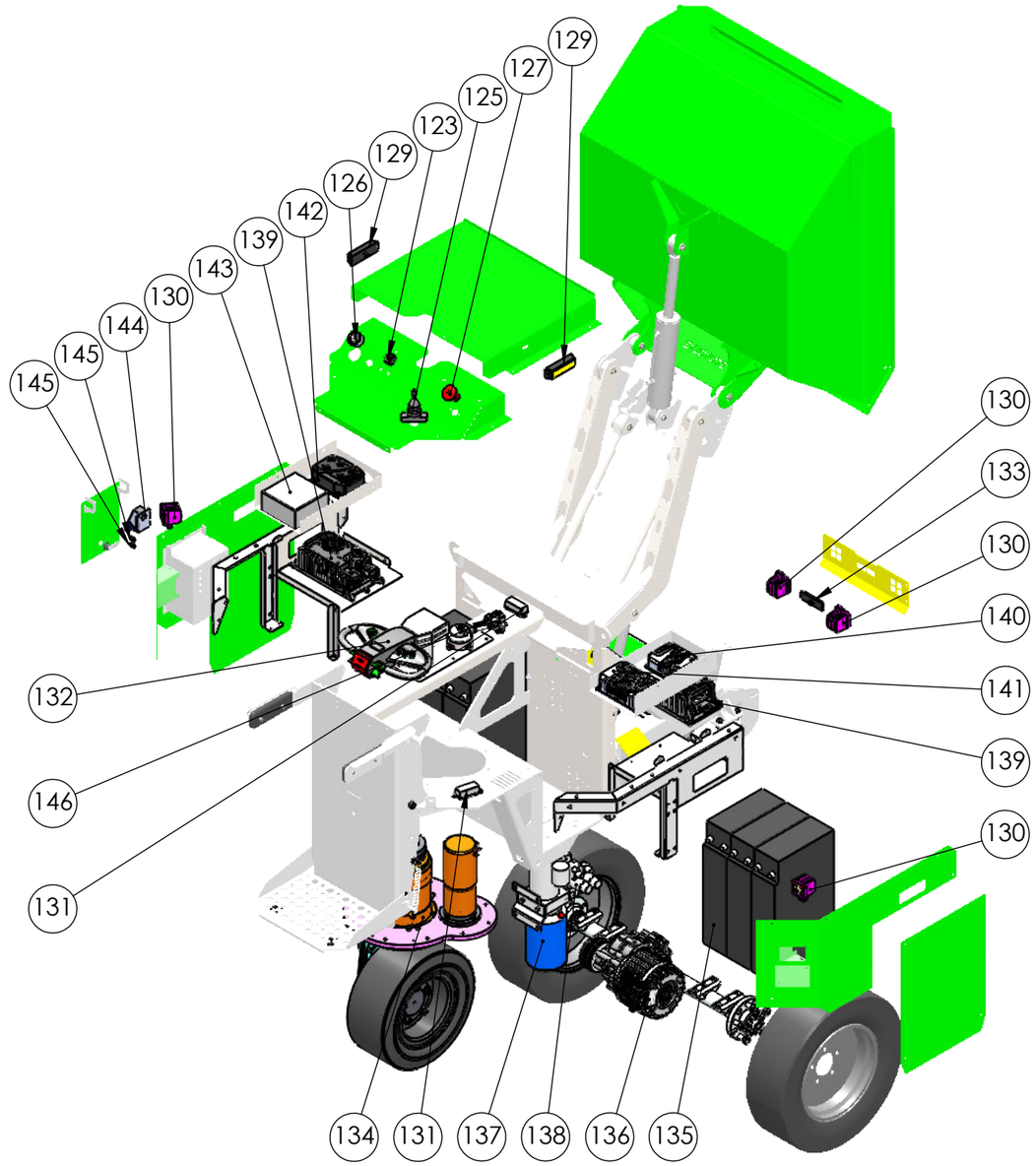

Electrical system parts list

ITEM NO.	PART NUMBER	DESCRIPTION	QTY.
125	E1516-3004	Curtis Joystick	1
126	vaf11150	Battery Charge Level Guage	1
127	42464	60mm Dia E Stop	1
123	22232_01	Toggle Switch	1
129	SM-SL012	Beacon light flash - Amber SM-SL012	2
130	E1516-3003	LED Light Unit	2
131	E1516-3012	Mega Fuse / Contactor	1
132	E1516-5601	Steering Assembly	1
133	SM-SL012-Rev2	Beacon light flash - Amber SM-SL012	1
134	E1516-3002	Vertical electric wheels EBv570.000C-B	1
135	BATT_560x125x320		6
136	OF151124EC01	Drive Axle c/w Motor	1
137	E1516-2510	Vibo Hydraulic Power pack	1
138	E1516-1090	VIBO Solenoid Valve Block	2
139	DeltaQ IC1200-A1	Delta Q - Battery Charger	1
140	E1516-3007	1222 electric steering	1
141	1234SE	1234SE Controler	1
142	OI470331232SE_A		1
143	E1516-3009	Junction Box	1
144	220V PEW163CS	220V Socket-angle_box	1
145	4568	Coms Plug	2
146	E1516-3008	SW80 - 1674 DC Contactor	1
147	E1516-3015	Wireing Loom	1

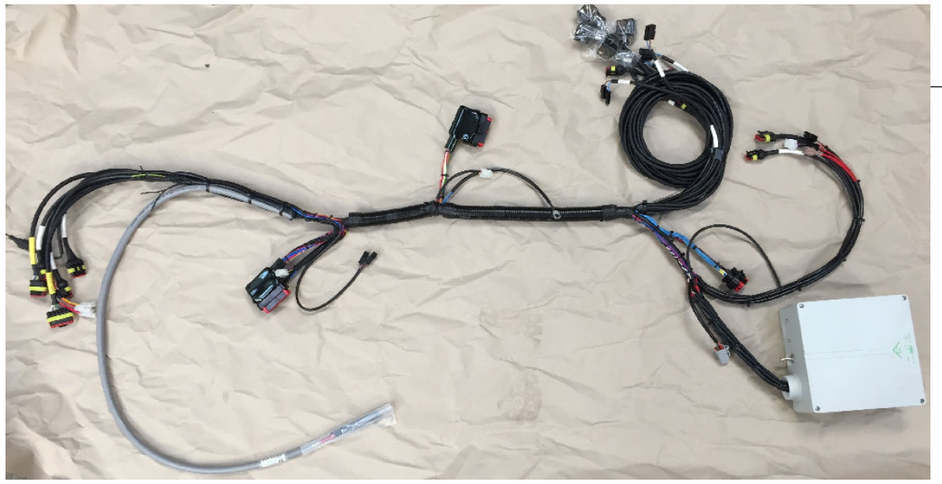

147

6. TECHNICAL DATA
ED1500 Parts list

Drive unit parts list

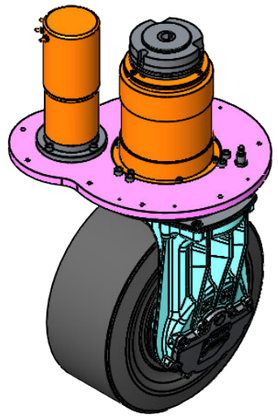

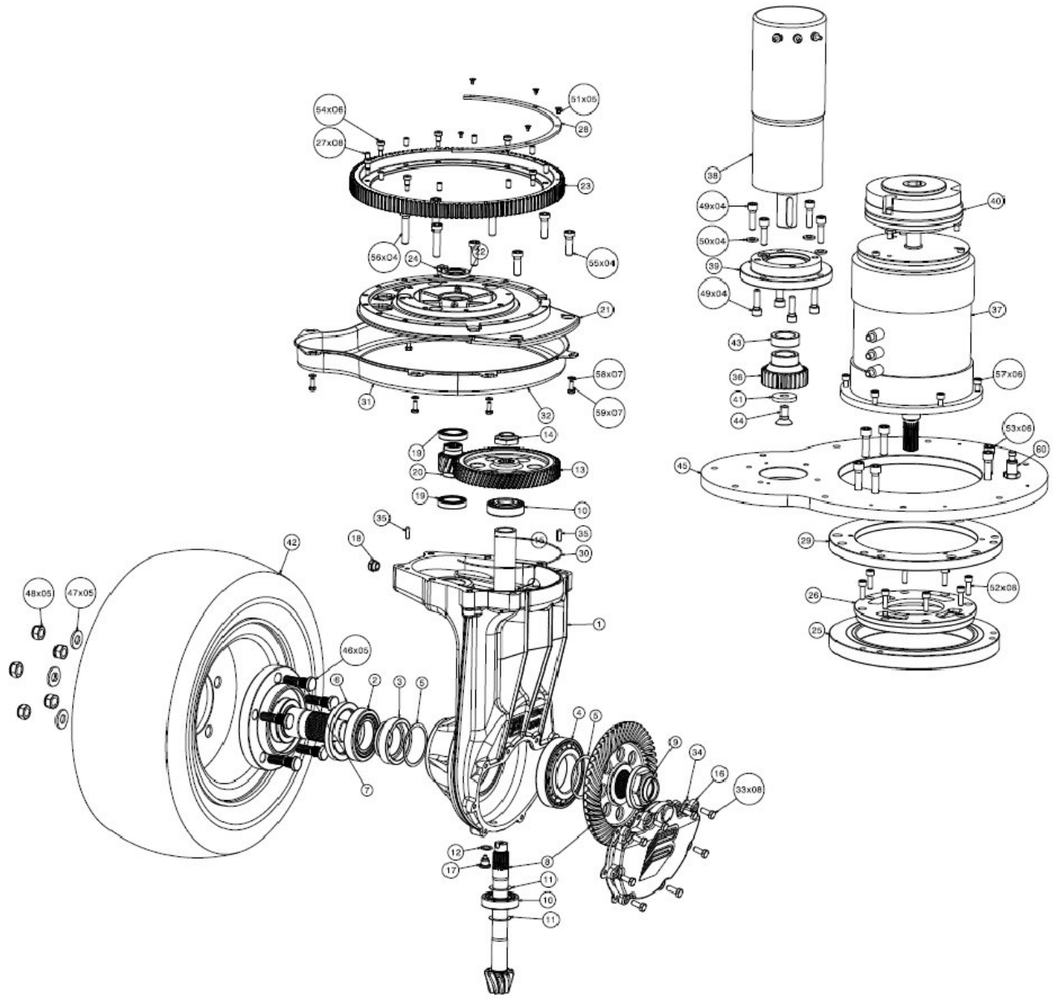

Drive unit parts list

Pos	Q.ta	Part number	Description
1	1	570.0001.00.A	Body Casting
2	1	313054	Tapered Roller Bearing
3	1	350.004.00-A	Wheel Bearing Spacer
4	1	313055	Roller Bearing
5	2	350.0003.00	Shim 76x65x0 3mm
6	1	601196	Sealing Ring AS-75x100x10
7	1	475.0049.00-E	Wheel Flange
8	1	570.0002.00	Bevel
9	1	475.0109.00-A	Collar Nut m36x2
10	2	313056	Roller bearing
11	2	250.0007.00	Shim
12	2	"	Shim
13	1	400.0006.00-A	Ring Gear
14	1	230.0007.00-A	Collar Nut m20 x 1.5
15	1	570.0009.00-A	Bearing spacer pinion
16	1	350.0019.00-A	Rear Cover
17	1	744037	Sump plug
18	1	744030	Oil Level Plug m14 x 1.5
19	2	313057	Ball Bearing
20	1	400.0009.00-B	Steering Motor Gear
21	1	400.0011.00-B	Pivot Bearing
22	1	801199	Seal 30x47x7
23	1	570.0005.00-A	Steering Ring Gear
24	1	744021	Breather Plug m14 x 1.5
25	1	3130004	Bearing
26	1	475.0050.00-B	Fixed Motor Bracket
27	8	503009	Dowel Pins 8 x 16
28	1	570.0033.00	Sensor Position Plate
29	1	475.0032.00B	Motor Mounting Flange
30	1	300112	Sealing Gasket
31	1	570.0022.00	Crankcase Left
32	1	570.0029.00	Crankcase Right
33	8	430808	Bolt M8 x 30mm
34	8	"	Bolt M8 x 30mm
35	2	530600	Dowel Pin 8 x 20
36	1	504011300	Steering Gear
37	1	570.0026.00	Traction Motor 24v
38	1	4008.0047.00	Steering Gearbox 24v
39	1	4008.0058.00	Steering Flange Plate
40	1	570.0031.00	Em Brake 75nm 24v
41	1	417.0052.00	Steering Motor Washer
42	1	570.0012.00	Tire 21 x 8 x 9
43	1	475.0020.00	Steering Motor Spacer
44	1	421216	Bolt m12 x 30mm
45	1	570.0032.00	Banjo Plate
46	5	345011400-B	Wheel Studs
47	5	440710	Washer 15 x 32 x 3
48	5	501404	Wheel Nuts m14 x 1.5
49	8	401024	Allen Head Bolts m10 X 35mm
50	4	430425	Spring Washer 5 x 20 x 2
51	5	421005	Bolt m8 x 25mm
52	8	430425	Allen Head Bolt m8 x 25mm
53	8	401204	" " " m12 x 50
54	6	481029	Collar Bolt m6 x 10mm
55	4	401233	Allen Head Bolt m12 x 35mm
56	4	401232	" " " m12 x 50mm
57	6	400902	" " " m8 x 20mm
58	7	440501	External Washer 5.5 x 9 x 0.5
59	7	430602	Bolt m6 x 16mm
60	1	600121	Homing Sensor m18 x 1

7

TROUBLESHOOTING

Delta Q IC1200 battery charger fault and error list

Code	Description	Solution
E-0-0-1 E-0-2-1	Battery high voltage	Possible causes: wrong battery voltage for charger, other charger also attached, resistive battery. Possible solutions: check the battery voltage and cable connections. Check battery size and condition. This error will automatically clear once the voltage is in range.
E-0-0-2 E-0-2-2	Battery low voltage	Possible causes: battery disconnected, battery overdischarged. Possible solutions: check the battery voltage and cable connections. Check battery size and condition. This error will automatically clear once the voltage is in range.
E-0-0-3	Charge timeout caused by battery pack not reaching required voltage within safe time limit. (charge profile dependent)	Possible causes: charger output reduced due to high temperatures, poor battery health, very deeply discharged battery and /or poorly connected battery. Possible solutions: operate at lower ambient temperature. Replace battery pack. Check DC connections. This error will clear once the charger is reset by cycling DC or AC.
E-0-0-4	Battery could not meet minimum voltage (charge profile dependent)	Possible causes: check for shorted or damaged cells. Possible solutions: replace battery pack. Check DC connections. This error will automatically clear once the charger is reset by cycling DC or AC.
E-0-0-7	Battery amp hour limit exceeded	Possible causes: poor battery health, very deeply discharged battery, poorly connected battery, and /or high parasitic loads on battery while charging. Possible solutions: replace battery pack. Check DC connections. Disconnect parasitic loads. This error will automatically clear once the charger is reset by cycling DC or AC.
E-0-0-8	Battery temperature is out of range	Possible battery temperature sensor error. Check temperature sensor and connections. Reset charger. This error will clear once the condition has been corrected.
E-0-1-2	Reverse polarity error	Battery is connected to the charger incorrectly. Check the battery connections. This error will clear once the condition has been corrected.
E-0-1-6 E-0-1-8 E-0-2-6	USB operation failed (software)	Software upgrade failure or script operation failure. Ensure the USB flash drive is properly formatted and reinsert the USB flash drive.
E-0-1-7	USB operation failed (hardware)	Remove and reinsert the USB drive. If condition persists, cycle AC and retry by reinserting the USB drive.
E-0-2-3	High AC voltage error (>270VAC)	Connect charger to an AC source that provides stable AC between 85 -270 VAC / 45-65 Hz. This error will clear once the condition has been corrected.
E-0-2-4	Charger failed to initialize	The charger has failed to turn on properly. Disconnect AC input and battery for 30 seconds before retrying.
E-0-2-5	Low AC voltage oscillation error	AC source is unstable. Could be caused by undersized generator and /or severely undersized input cables. Connect charger to an AC source that provides stable AC between 85 -270 VAC / 45-65 Hz. This error will clear once the condition has been corrected.
F-0-0-1, F-0-0-2 F-0-0-3, F-0-0-4 F-0-0-6		Internal charger fault. Remove AC and battery for minimum 30 seconds and retry charger. If it fails again, please contact the manufacturer of your vehicle or machine.

7. TROUBLESHOOTING
Delta Q 1200 battery charger

Delta Q IC1200 charging profiles

Charging Profiles

The IC Series charger contains up to 25 selectable charging profiles stored in its internal memory to charge batteries. These profiles are specific to each manufacturer and model of battery. Your equipment supplier or charger Distributor is responsible for ensuring the active charge profile matches the battery pack charging requirements. Contact them with any questions about the default profile, the other profiles on the charger, and which profile to select for each battery pack.

Selecting A Charge Profile

1. Disconnect AC input from the charger, or from the wall outlet. Wait 30 seconds for the input relay to open.

2. While reconnecting AC input, press and hold the Select Charge Profile Button. Hold the button (approximately 10 seconds) through the light check function until Error Indicator is on (in amber) and Battery Charging Indicator (In green) starts flashing.

3. Press and release the Select Charge Profile Button to advance through the charge profiles. The selected charging Profile will be displayed up to three times (e.g. "P-0-1-1" for Profile 11).*

   *Process will time out and profile will remain unchanged if there is 15 seconds of inactivity, a profile number is allowed to display three times, or if AC power is cycled.

4. Once the desired charging profile is displayed, press and hold the Select Charge Profile button for 10 seconds to confirm selection and exit from Profile Selection Mode. When the charge profile is confirmed, the Error Indicator and Battery Charging Indicator lights will turn off, while the blue AC Power Indicator stays lit. At this point, the button can be released.

5. Press the Select Charge Profile Button to check that the desired profile has been selected.

In some circumstances, the charging profile output will be altered, to maintain safe operations. The unit automatically reduces its output power if the temperature rises above set thresholds, or if the AC input voltage is too low. The charger will also reduce output power if it detects that the battery pack is damaged. If power is interrupted, and then returns the charger will start and continue to operate without hazard to the user, or damage to the batteries.

Identifying Charger Serial Number

The charger's serial number is printed on the front of the charger. This is the number to provide when requesting technical support.

Delta Q QuiQ1000 battery charger fault and error list

Maintenance Instructions

1. Do not expose charger to high pressure water spray when cleaning vehicle.
2. The enclosure of the charger meets IP66, making it dust-tight and protected against powerful water jets. The AC connection is rated to IP20, which is not protected against water. Protect the AC connection if used in wet or dusty environments.
3. If the detachable input power supply cord set is damaged, replace with a cord that is appropriate for your region:
   - This charger is provided with a cord set for connection to outlets operating at nominal 120 Volts (or 240 Volts as appropriate). If the input plug does not fit the power outlet, contact Delta-Q Technologies for the proper cord set terminating in an attachment plug of the proper configuration for the power outlet.
   - 'North America: UL or CSA listed/approved detachable cord, 3 conductor, 16AWG minimum and rated SJT; terminated in a grounding type IEC 60320 C14 plug rated 250V, 13A minimum
   - For all other regions: Safety approved detachable cord, 3 conductor, 1.5mm² minimum, rated appropriately for industrial use. The cord set must be terminated on one end with a grounding type input connector appropriate for use in the country of destination and, on the other end, an output grounding type IEC 60320 C14 plug.

Troubleshooting Instructions

If a fault occurs, count the number of red flashes between pauses and refer to the table below.

Flashes	Cause	Solution
⏸ ✳ ⏸	Battery high voltage	Check battery size and condition. This fault will clear automatically once the condition has been corrected.
⏸ ✳ ✳ ⏸	Battery low voltage	Check battery size and condition. This fault will clear automatically once the condition has been corrected.
⏸ ✳ ✳ ✳ ⏸	Charge timeout caused by battery pack not reaching required voltage; or charger output reduced due to high temperatures.	Check connections, that battery type matches selected charge profile and operate the charger at a lower ambient temperature. Reset the charger by interrupting AC power for 15+ seconds.
⏸ ✳ ✳ ✳ ✳ ⏸	Battery could not be trickle charged up to minimum voltage.	Check for shorted or damaged cells. Reset the charger by interrupting AC power for 15+ seconds.
⏸ ✳ ✳ ✳ ✳ ✳ ⏸	Charger shutdown due to high internal temperature.	Ensure sufficient cooling airflow. Reset the charger by interrupting AC power for 15+ seconds.
⏸ ✳ ✳ ✳ ✳ ✳ ✳ ⏸	Internal charger fault	Reset the charger by interrupting AC power for 15+ seconds. Return to service depot if fault persists.

Curtis 1232/34 AC controller troubleshooting

Troubleshooting a fault

In the unlikely event a afault occurs on the dumper.
Use the following codes to troubleshoot the fault.
For further assistance contact your local dealer.

DIAGNOSTICS AND TROUBLESHOOTING

These controllers detect a wide variety of faults or error conditions. Faults can be detected by the operating system or by the VCL code. This chapter describes the faults detected by the operating system

Faults detected by VCL code (faults 51–67 in Table 6) cannot be defined here as they will vary from application to application. Refer to the appropriate OEM documentation for information on these faults.

DIAGNOSTICS

Diagnostics information can be obtained in either of two ways: (1) by reading the display on a 1313 handheld or 1314 PC programmer or (2) by observing the fault codes issued by the Status LEDs. See Table 5 for a summary of LED display formats.

The 1313/1314 programmer will display all faults that are currently set as well as a history of the faults that have been set since the history log was last cleared. The 1313/1314 displays the faults by name.

The pair of LEDs built into the controller (one red, one yellow) produce flash codes displaying all the currently set faults in a repeating cycle. Each code consists of two digits. The red LED flashes once to indicate that the first digit of the code will follow; the yellow LED then flashes the appropriate number of times for the first digit. The red LED flashes twice to indicate that the second digit of the code will follow; the yellow LED flashes the appropriate number of times for the second digit.

Example:

B+ Undervoltage Cutback (code 23).

In the Fault menu of the 1313/1314 programmer, the words B+ Undervoltage Cutback will be displayed; the real-time battery voltage is displayed in the Monitor menu ("Capacitor Voltage").

The controller's two LEDs will display this repeating pattern:

Red	Yellow	Red	Yellow
*	* *	* *	* * *
(first digit)	(2)	(second digit)	(3)

The numerical codes used by the yellow LED are listed in the troubleshooting chart (Table 6), which also lists possible fault causes and describes the conditions that set and clear each fault.

Summary of LED Display Formats

The two LEDs have four different display modes, indicating the type of information they are providing.

Table 5 Types of LED Display

Display	Status
Neither LED illuminated	Controller is not powered on; or vehicle has dead battery; or severe damage.
Yellow LED flashing	Controller is operating normally.
Yellow and red LEDs both on solid	Controller is in Flash program mode.
Red LED on solid	Internal hardware fault detected by the Supervisor or Primary microprocessor. Missing or corrupt software. Interrupting a software download may cause corruption of the software. Cycle KSI to clear. Reload software or replace controller if necessary.
Red LED and yellow LED flashing alternately	Controller has detected a fault. 2-digit code flashed by yellow LED identifies the specific fault; one or two flashes by red LED indicate whether first or second code digit will follow.

TROUBLESHOOTING

The troubleshooting chart provides the following information on all the controller faults:

- fault code.
- fault name as displayed on the programmer's LCD.
- the effect of the fault.
- possible causes of the fault.
- fault set conditions.
- fault clear conditions.

Whenever a fault is encountered and no wiring or vehicle fault can be found, shut off KSI and turn it back on to see if the fault clears. If it does not, shut off KSI and remove the 35-pin connector. Check the connector for corrosion or damage, clean it if necessary, and re-insert it.

CODE	PROGRAMMER LCD DISPLAY *EFFECT OF FAULT*	POSSIBLE CAUSE	SET / CLEAR CONDITIONS
12	**Controller Overcurrent** *ShutdownMotor;* *ShutdownMainContactor;* *ShutdownEMBrake;* *ShutdownThrottle;* *FullBrake.*	1. External short of phase U, V, or W motor connections. 2. Motor parameters are mis-tuned. 3. Controller defective. 4. Speed encoder noise problems.	*Set:* Phase current exceeded the current measurement limit. *Clear:* Cycle KSI.
13	**Current Sensor Fault** *ShutdownMotor;* *ShutdownMainContactor;* *ShutdownEMBrake;* *ShutdownThrottle;* *FullBrake.*	1. Leakage to vehicle frame from phase U, V, or W (short in motor stator). 2. Controller defective.	*Set:* Controller current sensors have invalid offset reading. *Clear:* Cycle KSI.
14	**Precharge Failed** *ShutdownMotor;* *ShutdownMainContactor;* *ShutdownEMBrake;* *ShutdownThrottle;* *FullBrake.*	1. See Monitor menu » Battery: Capacitor Voltage. 2. External load on capacitor bank (B+ connection terminal) that prevents the capacitor bank from charging.	*Set:* The precharge failed to charge the capacitor bank. *Clear:* Cycle Interlock input or use VCL function *Enable_Precharge().*
15	**Controller Severe Undertemp** *ShutdownMotor;* *ShutdownMainContactor;* *ShutdownEMBrake;* *ShutdownThrottle;* *FullBrake.*	1. See Monitor menu » Controller: Temperature. 2. Controller is operating in an extreme environment.	*Set:* Heatsink temperature below -40°C. *Clear:* Bring heatsink temperature above -40°C, and cycle interlock or KSI.
16	**Controller Severe Overtemp** *ShutdownMotor;* *ShutdownMainContactor;* *ShutdownEMBrake;* *ShutdownThrottle;* *FullBrake.*	1. See Monitor menu » Controller: Temperature. 2. Controller is operating in an extreme environment. 3. Excessive load on vehicle. 4. Improper mounting of controller.	*Set:* Heatsink temperature above +95°C. *Clear:* Bring heatsink temperature below +95°C, and cycle interlock or KSI.
17	**Severe B+ Undervoltage** *No drive torque.*	1. Battery parameters are misadjusted. 2. Non-controller system drain on battery. 3. Battery resistance too high. 4. Battery disconnected while driving. 5. See Monitor menu » Battery: Capacitor Voltage. 6. Blown B+ fuse or main contactor did not close.	*Set:* Capacitor bank voltage dropped below the Severe Undervoltage limit (see page 25) with FET bridge enabled. *Clear:* Bring capacitor voltage above Severe Undervoltage limit.
17	**Severe KSI Undervoltage** *No action.*	1. See Monitor menu » Battery: Keyswitch Voltage. 2. Non-controller system drain on battery/ KSI circuit wiring. 3. KSI disconnected while driving. 4. Blown KSI fuse.	*Set:* When below Brownout Voltage for 2 seconds (see Table D-1). *Clear:* Bring KSI voltage above Brownout Voltage.
18	**Severe B+ Overvoltage** *ShutdownMotor;* *ShutdownMainContactor;* *ShutdownEMBrake;* *ShutdownThrottle;* *FullBrake.*	1. See Monitor menu » Battery: Capacitor Voltage. 2. Battery parameters are misadjusted. 3. Battery resistance too high for given regen current. 4. Battery disconnected while regen braking.	*Set:* Capacitor bank voltage exceeded the Severe Overvoltage limit (see page 25) with FET bridge enabled. *Clear:* Bring capacitor voltage below Severe Overvoltage limit, and then cycle KSI.

CODE	PROGRAMMER LCD DISPLAY *EFFECT OF FAULT*	POSSIBLE CAUSE	SET / CLEAR CONDITIONS
18	**Severe KSI Overvoltage** *ShutdownMotor;* *ShutdownMainContactor;* *ShutdownEMBrake;* *ShutdownThrottle;* *FullBrake.*	1. Incorrect (to high) battery-voltage applied to KSI (pin 1) 2. See Monitor menu » Battery: Keyswitch Voltage. Note: Prevents the Main Contactor closure if KSI is greater than the Severe Overvoltage limit.	*Set:* KSI voltage exceeded Severe Overvoltage limiit *Clear:* Bring KSI voltage below the Severe Overvoltage limit (see page 25, Severe Overvoltage)
22	**Controller Overtemp Cutback** *Reduced drive and brake torque.*	1. See Monitor menu » Controller: Temperature. 2. Controller is performance-limited at this temperature. 3. Controller is operating in an extreme environment. 4. Excessive load on vehicle. 5. Improper mounting of controller.	*Set:* Heatsink temperature exceeded 85°C. *Clear:* Bring heatsink temperature below 85°C.
23	**B+ Undervoltage Cutback** *Reduced drive torque.*	1. Normal operation. Fault indicates the batteries need recharging. Controller is performance limited at this voltage. 2. Battery parameters are misadjusted. 3. Non-controller system drain on battery. 4. Battery resistance too high. 5. Battery disconnected while driving. 6. See Monitor menu » Battery: Capacitor Voltage. 7. Blown B+ fuse or main contactor did not close.	*Set:* Capacitor bank voltage dropped below the Undervoltage limit (see page 25) with the FET bridge enabled. *Clear:* Bring capacitor voltage above the Undervoltage limit.
24	**B+ Overvoltage Cutback** *Reduced brake torque. Note: This fault is declared only when the controller is running in regen.*	1. Normal operation. Fault shows that regen braking currents elevated the battery voltage during regen braking. Controller is performance limited at this voltage. 2. Battery parameters are misadjusted. 3. Battery resistance too high for given regen current. 4. Battery disconnected while regen braking. 5. See Monitor menu » Battery: Capacitor Voltage.	*Set:* Capacitor bank voltage exceeded the Overvoltage limit (see page 25) with the FET bridge enabled. *Clear:* Bring capacitor voltage below the Overvoltage limit.
25	**+5V Supply Failure** *None, unless a fault action is programmed in VCL.*	1. External load impedance on the +5V supply (pin 26) is too low. 2. See Monitor menu » outputs: 5 Volts and Ext Supply Current.	*Set:* +5V supply (pin 26) outside the 5 V±10% range. *Clear:* Bring voltage within range.
26	**Digital Out 6 Open/Short** *Digital Output 6 driver will not turn on.*	1. External load impedance on Digital Output 6 driver (pin 19) is too low.	*Set:* Digital Output 6 (pin 19) current exceeded 1 Amp. *Clear:* Remedy the overcurrent cause and use the VCL function *Set_DigOut()* to turn the driver on again.
27	**Digital Out 7 Open/Short** *Digital Output 7 driver will not turn on.*	1. External load impedance on Digital Output 7 driver (pin 20) is too low.	*Set:* Digital Output 7 (pin 20) current exceeded 1 Amp. *Clear:* Remedy the overcurrent cause and use the VCL function *Set_DigOut()* to turn the driver on again.

7. TROUBLESHOOTING
Curtis 1232/34 AC controller
ECOVOLVE

CODE	PROGRAMMER LCD DISPLAY *EFFECT OF FAULT*	POSSIBLE CAUSE	SET / CLEAR CONDITIONS
28	**Motor Temp Hot Cutback** *Reduced drive torque.*	1. Motor temperature is at or above the programmed Temperature Hot setting, and the current is being cut back. 2. Motor Temperature Control Menu parameters are mis-tuned. 3. See Monitor menu » Motor: Temperature and » Inputs: Analog2. 4. If the application doesn't use a motor thermistor, Temp Compensation and Temp Cutback should be programmed Off.	*Set:* Motor temperature is at or above the Temperature Hot parameter setting. *Clear:* Bring the motor temperature within range.
29	**Motor Temp Sensor Fault** *MaxSpeed reduced (LOS, Limited Operating Strategy), and motor temperature cutback disabled.*	1. Motor thermistor is not connected properly. 2. If the application doesn't use a motor thermistor, Motor Temp Sensor Enable should be programmed Off. 3. See Monitor menu » Motor: Temperature and » Inputs: Analog2.	*Set:* Motor thermistor input (pin 8) is at the voltage rail (0 V or 10 V). *Clear:* Bring the motor thermistor input voltage within range.
31	**Coil1 Driver Open/Short** *ShutdownDriver1.*	1. Open or short on driver load. 2. Dirty connector pins. 3. Bad crimps or faulty wiring.	*Set:* Driver 1 (pin 6) is either open or shorted. This fault can be set only when Main Enable = Off. *Clear:* Correct open or short, and cycle driver.
31	**Main Open/Short** *ShutdownMotor;* *ShutdownMainContactor;* *ShutdownEMBrake;* *ShutdownThrottle;* *FullBrake.*	1. Open or short on driver load. 2. Dirty connector pins. 3. Bad crimps or faulty wiring.	*Set:* Main contactor driver (pin 6) is either open or shorted. This fault can be set only when Main Enable = On. *Clear:* Correct open or short, and cycle driver
32	**Coil2 Driver Open/Short** *ShutdownDriver2.*	1. Open or short on driver load. 2. Dirty connector pins. 3. Bad crimps or faulty wiring.	*Set:* Driver 2 (pin 5) is either open or shorted. This fault can be set only when EM Brake Type = 0. *Clear:* Correct open or short, and cycle driver.
32	**EMBrake Open/Short** *ShutdownEMBrake;* *ShutdownThrottle;* *FullBrake.*	1. Open or short on driver load. 2. Dirty connector pins. 3. Bad crimps or faulty wiring.	*Set:* Electromagnetic brake driver (pin 5) is either open or shorted. This fault can be set only when EM Brake Type >0. *Clear:* Correct open or short, and cycle driver.
33	**Coil3 Driver Open/Short** *ShutdownDriver3.*	1. Open or short on driver load. 2. Dirty connector pins. 3. Bad crimps or faulty wiring.	*Set:* Driver 3 (pin 4) is either open or shorted. *Clear:* Correct open or short, and cycle driver.
34	**Coil4 Driver Open/Short** *ShutdownDriver4.*	1. Open or short on driver load. 2. Dirty connector pins. 3. Bad crimps or faulty wiring.	*Set:* Driver 4 (pin 3) is either open or shorted. *Clear:* Correct open or short, and cycle driver.
35	**PD Open/Short** *ShutdownPD.*	1. Open or short on driver load. 2. Dirty connector pins. 3. Bad crimps or faulty wiring.	*Set:* Proportional driver (pin 2) is either open or shorted. *Clear:* Correct open or short, and cycle driver.
36	**Encoder Fault** *ShutdownEMBrake;* Motor disabled.	1. Motor encoder failure. 2. Bad crimps or faulty wiring. 3. See Monitor menu » Motor: Motor RPM.	*Set:* Motor encoder phase failure detected. *Clear:* Either cycle KSI, or if parameter LOS Upon Encoder Fault= On and Interlock has been cycled, then the Encoder Fault is cleared and Encoder LOS fault (code 93) is set, allowing limited motor control.
36	**Sin/Cos Sensor Fault** *ShutdownEMBrake;* Motor disabled.	1. Sin/Cos sensor failure. 2. Bad crimps or faulty wiring. 3. See Monitor menu » Motor: Motor RPM.	*Set:* Greater than Sin_Cos_Fault_Threshold % difference from expected value between two phases seen 5 times within one second. *Clear:* Cycle KSI, or VCL reset, or Entry into LOS mode if enabled, (or entry into an ACIM auto-characterization).

CODE	PROGRAMMER LCD DISPLAY *EFFECT OF FAULT*	POSSIBLE CAUSE	SET / CLEAR CONDITIONS
37	**Motor Open** *ShutdownMotor;* *ShutdownMainContactor;* *ShutdownEMBrake;* *ShutdownThrottle;* *FullBrake.*	1. Motor phase is open. 2. Bad crimps or faulty wiring.	*Set:* Motor phase U, V, or W detected open. *Clear:* Cycle KSI.
38	**Main Contactor Welded** *ShutdownMotor;* *ShutdownMainContactor;* *ShutdownEMBrake;* *ShutdownThrottle;* *FullBrake.*	1. Main contactor tips are welded closed. 2. Motor phase U or V is disconnected or open. 3. An alternate voltage path (such as an external precharge resistor) is providing a current to the capacitor bank (B+ connection terminal).	*Set:* Just prior to the main contactor closing, the capacitor bank voltage (B+ connection terminal) was loaded for a short time and the voltage did not discharge. *Clear:* Cycle KSI
39	**Main Contactor Did Not Close** *ShutdownMotor;* *ShutdownMainContactor;* *ShutdownEMBrake;* *ShutdownThrottle;* *FullBrake.*	1. Main contactor did not close. 2. Main contactor tips are oxidized, burned, or not making good contact.* 3. External load on capacitor bank (B+ connection terminal) that prevents capacitor bank from charging. 4. Blown B+ fuse.	*Set:* With the main contactor commanded closed, the capacitor bank voltage (B+ connection terminal) did not charge to B+. *Clear:* Cycle KSI. *New contactors may need to be cycled electrically & mechanically to remove any non-conductive material on the tips. Use reduced voltage (e.g., 12V) to prevent tip damage through excessive arcing.
41	**Throttle Wiper High** *ShutdownThrottle.*	1. See Monitor menu » Inputs: Throttle Pot. 2. Throttle pot wiper voltage too high.	*Set:* Throttle pot wiper (pin 16) voltage is higher than the high fault threshold (can be changed with the VCL function *Setup_Pot_Faults()*). *Clear:* Bring throttle pot wiper voltage below the fault threshold.
42	**Throttle Wiper Low** *ShutdownThrottle.*	1. See Monitor menu » Inputs: Throttle Pot. 2. Throttle pot wiper voltage too low.	*Set:* Throttle pot wiper (pin 16) voltage is lower than the low fault threshold (can be changed with the VCL function *Setup_Pot_Faults()*). *Clear:* Bring throttle pot wiper voltage above the fault threshold.
43	**Pot2 Wiper High** *FullBrake.*	1. See Monitor menu » Inputs: Pot2 Raw. 2. Pot2 wiper voltage too high.	*Set:* Pot2 wiper (pin 17) voltage is higher than the high fault threshold (can be changed with the VCL function *Setup_Pot_Faults()*). *Clear:* Bring Pot2 wiper voltage below the fault threshold.
44	**Pot2 Wiper Low** *FullBrake.*	1. See Monitor menu » Inputs: Pot2 Raw. 2. Pot2 wiper voltage too low.	*Set:* Pot2 wiper (pin 17) voltage is lower than the low fault threshold (can be changed with the VCL function *Setup_Pot_Faults()*). *Clear:* Bring Pot2 wiper voltage above the fault threshold.
45	**Pot Low OverCurrent** *ShutdownThrottle;* *FullBrake.*	1. See Monitor menu » Outputs: Pot Low. 2. Combined pot resistance connected to pot low is too low.	*Set:* Pot low (pin 18) current exceeds 10 mA. *Clear:* Clear pot low overcurrent condition and cycle KSI.
46	**EEPROM Failure** *ShutdownMotor;* *ShutdownMainContactor;* *ShutdownEMBrake;* *ShutdownThrottle;* *ShutdownInterlock;* *ShutdownDriver1;* *ShutdownDriver2;* *ShutdownDriver3;* *ShutdownDriver4;* *ShutdownPD;* *FullBrake.*	1. Failure to write to EEPROM memory. This can be caused by EEPROM memory writes initiated by VCL, by the CAN bus, by adjusting parameters with the programmer, or by loading new software into the controller.	*Set:* Controller operating system tried to write to EEPROM memory and failed. *Clear:* Download the correct software (OS) and matching parameter default settings into the controller and cycle KSI.

7. TROUBLESHOOTING
Curtis 1232/34 AC controller
ECOVOLVE

CODE	PROGRAMMER LCD DISPLAY *EFFECT OF FAULT*	POSSIBLE CAUSE	SET / CLEAR CONDITIONS
47	**HPD/Sequencing Fault** *ShutdownThrottle.*	1. KSI, interlock, direction, and throttle inputs applied in incorrect sequence. 2. Faulty wiring, crimps, or switches at KSI, interlock, direction, or throttle inputs. 3. See Monitor menu » Inputs.	*Set:* HPD (High Pedal Disable) or sequencing fault caused by incorrect sequence of KSI, interlock, direction, and throttle inputs. *Clear:* Reapply inputs in correct sequence.
47	**Emer Rev HPD** *ShutdownThrottle;* *ShutdownEMBrake.*	4. Emergency Reverse operation has concluded, but the throttle, forward and reverse inputs, and interlock have not been returned to neutral.	*Set:* At the conclusion of Emergency Reverse, the fault was set because various inputs were not returned to neutral. *Clear:* If EMR_Interlock = On, clear the interlock, throttle, and direction inputs. If EMR_Interlock = Off, clear the throttle and direction inputs.
49	**Parameter Change Fault** *ShutdownMotor;* *ShutdownMainContactor;* *ShutdownEMBrake;* *ShutdownThrottle;* *FullBrake.*	1. This is a safety fault caused by a change in certain parameter settings so that the vehicle will not operate until KSI is cycled. For example, if a user changes the Throttle Type this fault will appear and require cycling KSI before the vehicle can operate.	*Set:* Adjustment of a parameter setting that requires cycling of KSI. *Clear:* Cycle KSI.
51-67	**OEM Faults** *(See OEM documentation.)*	1. These faults can be defined by the OEM and are implemented in the application-specific VCL code. See OEM documentation.	*Set:* See OEM documentation. *Clear:* See OEM documentation.
68	**VCL Run Time Error** *ShutdownMotor;* *ShutdownMainContactor;* *ShutdownEMBrake;* *ShutdownThrottle;* *ShutdownInterlock;* *ShutdownDriver1;* *ShutdownDriver2;* *ShutdownDriver3;* *ShutdownDriver4;* *ShutdownPD;* *FullBrake.*	1. VCL code encountered a runtime VCL error. 2. See Monitor menu » Controller: VCL Error Module and VCL Error. This error can then be compared to the runtime VCL module ID and error code definitions found in the specific OS system information file.	*Set:* Runtime VCL code error condition. *Clear:* Edit VCL application software to fix this error condition; flash the new compiled software and matching parameter defaults; cycle KSI.
69	**External Supply Out of Range** *None, unless a fault action is programmed in VCL.*	1. External load on the 5V and 12V supplies draws either too much or too little current. 2. Fault Checking Menu parameters Ext Supply Max and Ext Supply Min are mis-tuned. 3. See Monitor menu » Outputs: Ext Supply Current.	*Set:* The external supply current (combined current used by the 5V supply [pin 26] and 12V supply [pin 25]) is either greater than the upper current threshold or lower than the lower current threshold. The two thresholds are defined by the External Supply Max and External Supply Min parameter settings (page 54). *Clear:* Bring the external supply current within range.
71	**OS General** *ShutdownMotor;* *ShutdownMainContactor;* *ShutdownEMBrake;* *ShutdownThrottle;* *ShutdownInterlock;* *ShutdownDriver1;* *ShutdownDriver2;* *ShutdownDriver3;* *ShutdownDriver4;* *ShutdownPD;* *FullBrake.*	1. Internal controller fault.	*Set:* Internal controller fault detected. *Clear:* Cycle KSI.
72	**PDO Timeout** *ShutdownThrottle;* CAN NMT State set to Pre-operational.	1. Time between CAN PDO messages received exceeded the PDO Timeout Period.	*Set:* Time between CAN PDO messages received exceeded the PDO Timeout Period. *Clear:* Cycle KSI or receive CAN NMT message.

CODE	PROGRAMMER LCD DISPLAY *EFFECT OF FAULT*	POSSIBLE CAUSE	SET / CLEAR CONDITIONS
73	**Stall Detected** *ShutdownEMBrake;* Motor disabled; Control Mode changed to LOS (Limited Operating Strategy).	1. Stalled motor. 2. Motor encoder failure. 3. Bad crimps or faulty wiring. 4. Problems with power supply for the motor encoder. 5. See Monitor menu » Motor: Motor RPM.	*Set:* No motor encoder movement detected. *Clear:* Either cycle KSI, or if parameter LOS Upon Encoder Fault = On and Interlock has been cycled, then the Stall Detected fault is cleared and Encoder LOS fault (code 93) is set, allowing limited motor control.
74	**Fault On Other Traction Controller**	1. Dual Drive fault: see Dual Drive manual.	
75	**Dual Severe Fault**	1. Dual Drive fault: see Dual Drive manual.	
77	**Supervisor Fault** *ShutdownMotor;* *ShutdownMainContactor;* *ShutdownEMBrake;* *ShutdownThrottle;* *ShutdownInterlock;* *ShutdownDriver1;* *ShutdownDriver2;* *ShutdownDriver3;* *ShutdownDriver4;* *ShutdownPD;* *FullBrake.*	1. The Supervisor has detected a mismatch in redundant readings. 2. Internal damage to Supervisor microprocessor. 3. Switch inputs allowed to be within upper and lower thresholds for over 100 milliseconds. (for recurring errors, check the switches for moisture).	*Set:* Mismatched redundant readings; damaged Supervisor; illegal switch inputs. *Clear:* Check for noise or voltage drift in all switch inputs; check connections; cycle KSI.
78	**Supervisor Incompatible** *ShutdownMotor;* *ShutdownMainContactor;* *ShutdownEMBrake;* *ShutdownThrottle;* *ShutdownInterlock;* *ShutdownDriver1;* *ShutdownDriver2;* *ShutdownDriver3;* *ShutdownDriver4;* *ShutdownPD;* *FullBrake.*	1. The main OS is not compatible with the Supervisor OS.	*Set:* Incompatible software. *Clear:* Load properly matched OS code or update the Supervisor code; cycle KSI.
82	**Bad Calibrations** *ShutdownMotor;* *ShutdownMainContactor;* *ShutdownEMBrake;* *ShutdownThrottle;* *FullBrake.*	1. Internal controller fault.	*Set:* Internal controller fault detection. *Clear:* Cycle KSI.
83	**Driver Supply** *ShutdownMotor;* *ShutdownMainContactor;* *ShutdownEMBrake;* *ShutdownThrottle;* *FullBrake.*	1. Internal controller fault in the voltage supply for the driver circuits.	*Set:* Internal controller fault detection. *Clear:* Cycle KSI.

CODE	PROGRAMMER LCD DISPLAY *EFFECT OF FAULT*	POSSIBLE CAUSE	SET / CLEAR CONDITIONS
87	**Motor Characterization Fault** *ShutdownMotor;* *ShutdownMainContactor;* *ShutdownEMBrake;* *ShutdownThrottle;* *FullBrake.*	1. Motor characterization failed during characterization process. See Monitor menu » Controller: Motor Characterization Error for cause: 0 = sequencing error. Normally caused by turning off Motor Characterization Test Enable before running the test. 1 = encoder signal seen but step size not auto-detected; set up Encoder Steps manually 2 = motor temp sensor fault 3 = motor temp hot cutback fault 4 = controller overtemp cutback fault 5 = controller undertemp cutback fault 6 = undervoltage cutback fault 7 = severe overvoltage fault 8 = encoder signal not seen, or one or both channels missing 9 = motor parameters out of characterization range 20 = Sin/Cos sensor not found 21 = phasing not detected 22 = Sin/Cos sensor characterization failure 23 = started characterization procedure while motor rotating.	*Set:* Motor characterization failed during the motor characterization process. Normally caused by turning off Motor_Characterization_Test_Enable before running test. Needs controller reset. *Clear:* Correct fault; cycle KSI, or VCL reset.
88	**Encoder Pulse Count Fault** *ShutdownMotor;* *ShutdownMainContactor;* *ShutdownEMBrake;* *ShutdownThrottle;* *ShutdownInterlock;* *ShutdownDriver1;* *ShutdownDriver2;* *ShutdownDriver3;* *ShutdownDriver4;* *ShutdownPD;* *FullBrake.*	1. Encoder Steps parameter does not match the actual motor encoder.	*Set:* Detected wrong setting of the Encoder Steps parameter. *Clear:* Ensure the Encoder Steps parameter matches the actual encoder; cycle KSI.
89	**Motor Type Fault** *ShutdownMotor;* *ShutdownMainContactor;* *ShutdownEMBrake;* *ShutdownThrottle;* *FullBrake.*	2. The Motor_Type parameter value is out of range.	*Set:* Motor_Type parameter is set to an illegal value. *Clear:* Set Motor_Type to correct value and cycle KSI.

CODE	PROGRAMMER LCD DISPLAY *EFFECT OF FAULT*	POSSIBLE CAUSE	SET / CLEAR CONDITIONS
91	**VCL/OS Mismatch** *ShutdownMotor;* *ShutdownMainContactor;* *ShutdownEMBrake;* *ShutdownThrottle;* *ShutdownInterlock;* *ShutdownDriver1;* *ShutdownDriver2;* *ShutdownDriver3;* *ShutdownDriver4;* *ShutdownPD;* *FullBrake.*	1. The VCL software in the controller does not match the OS software in the controller.	*Set:* VCL and OS software do not match; when KSI cycles, a check is made to verify that they match and a fault is issued when they do not. *Clear:* Download the correct VCL and OS software into the controller.
92	**EM Brake Failed to Set** *ShutdownEMBrake;* *ShutdownThrottle.* Position Hold is engaged when Interlock = On.	1. Vehicle movement sensed after the EM Brake has been commanded to set. 2. EM Brake will not hold the motor from rotating.	*Set:* After the EM Brake was commanded to set and time has elapsed to allow the brake to fully engage, vehicle movement has been sensed. *Clear:* 1. Activate the Throttle (EM Brake type 2). 2. Activate the Interlock (EM Brake type 1).
93	**Encoder LOS (Limited Operating Strategy)** Enter LOS control mode.	1. Limited Operating Strategy (LOS) control mode has been activated, as a result of either an Encoder Fault (Code 36) or a Stall Detected fault (Code 73). 2. Motor encoder failure. 3. Bad crimps or faulty wiring. 4. Vehicle is stalled.	*Set:* Encoder Fault (code 36) or Stall Detected (code 73) was activated, if parameter LOS Upon Encoder Fault = On and Interlock has been cycled, then the Encoder LOS (code 93) control mode is activated, allowing limited motor control. *Clear:* Cycle KSI or, if LOS mode was activated by the Stall Detected fault, clear by ensuring encoder senses proper operation, Motor RPM = 0, and Throttle Command = 0.
94	**Emer Rev Timeout** *ShutdownEMBrake;* *ShutdownThrottle.*	1. Emergency Reverse was activated and concluded because the EMR Timeout timer has expired. 2. The emergency reverse input is stuck On.	*Set:* Emergency Reverse was activated and ran until the EMR Timeout timer expired. *Clear:* Turn the emergency reverse input Off.
98	**Illegal Model Number** *ShutdownMotor;* *ShutdownMainContactor;* *ShutdownEMBrake;* *ShutdownThrottle;* *FullBrake.*	1. Model_Number variable contains illegal value. 2. Software and hardware do not match. 3. Controller defective.	*Set:* Illegal Model_Number variable; when KSI cycles, a check is made to confirm a legal Model_Number, and a fault is issued if one is not found. *Clear:* Download appropriate software for your controller model.
99	**Parameter Mismatch** *ShutdownMotor;* *ShutdownMainContactor;* *ShutdownEMBrake;* *ShutdownThrottle;* *FullBrake.*	1. Dual drive enabled on only one controller. 2. Incorrect position feedback type chosen for motor technology in use. 3. Dual drive is enabled in torque mode.	*Set:* When the Dual Drive software is enabled, the controller must be set to either Speed Mode Express or Speed Mode; otherwise this fault is set. Motor Techology=0 must be paired with Feedback Type=1, and Motor Technology=1 must be paired with Feedback Type=2; otherwise this fault is set. *Clear:* Adjust parameters to appropriate values and cycle KSI.

Curtis 1222 Steering controller

Troubleshooting a fault

In the unlikely event a afault occurs on the dumper.
Use the following codes to troubleshoot the fault.
For further assistance contact your local dealer.

DIAGNOSTICS & TROUBLESHOOTING

The 1222 controller detects a wide variety of fault conditions. Faults with the steering controller Typically affect the traction controller aswell, asshown in the troubleshooting chart.

DIAGNOSTICS

Diagnostics information can be obtained in either of two ways: (1) by reading the display on a handheld programmer or (2) by observing the fault codes issued by the Status LEDs. See Table 5 for a summary of LED display formats.

The handheld programmer will display all faults that are currently set aswell as a history of the faults that have been set since the history log was last cleared. The programmer displays the faults by name.

The pair of LEDs built into the controller (one red, one yellow) produce flash codes displaying all the Currently set faults in a repeating cycle. Each code consists of two digits. The red LED flashes once to indicate that the first digit of the code will follow; the yellow LED then flashes the appropriate number of times for the first digit. The red LED flashes twice to indicate that the second digit of the code will follow; the yellow LED flashes the appropriate number of times for the second digit.

Example:

Command Analog3 Out of Range (code 42).

In the Fault menu of the handheld programmer, the words Command Analog3 Out of Range will be displayed; the actual voltage is displayed in the Monitor menu (Command Input » Analog Input » *Analog 3*).

The controller's two LEDs will display this repeating pattern:

Red

	Yellow	Red	Yellow
*	* *	* *	* * *
(first digit)	(2)	(second digit)	(3)

The numerical codes used by the yellow LED are listed in the troubleshooting chart (Table 6), which also lists possible fault causes and describes the conditions that set and clear each fault.

Summary of LED Display Formats

The two LEDs have four different display modes, indicating the type of information they are providing.

Table 5: Types of LED Display

Display

	Status
Neither LED illuminated	Controller is not powered on; or vehicle has dead battery; or severe damage.
Yellow LED flashing	Controller is operating normally.
Both LEDs on solid	Controller is in Flash program mode.
Red LED and yellow LED flashing alternately	Controller has detected a fault. 2-digit code flashed by yellow LED identifies the specific fault; one or two flashes by red LED indicate whether first or second code digit will follow.

TROUBLESHOOTING

The troubleshooting chart, Table 6, provides the following information about each controller fault:

- fault code
- fault name as displayed on the programmer's LCD
- CAN object index and sub-index of the fault
- possible causes of the fault
- fault *set* conditions and fault *clear* conditions
- steer fault action (effect of fault on steering)
- traction fault action (effect of fault on traction)

For each fault, the chart shows one of these four Steer Fault actions:

Warning Only — The 1222 still operates normally.

Shutdown — Immediate shutdown of the 1222 and turn-off of the fault output (pin 23).

Warning then Shutdown — The 1222 continues to operate until the traction motor comes to a stop or the timer (set by Fault Steering Timeout) expires. After this occurs, the Shutdown action takes place.

Hold then Shutdown — The 1222 tries to hold the existing wheel position regardless of operator input until the traction motor comes to a stop or the timer (set by Fault Steering Timeout) expires. After this occurs, the Shutdown action takes place.

Whenever a fault is encountered and no wiring or vehicle fault can be found, shut off KSI and turn it back on to see if the fault clears. If it does not, shut off KSI and remove the 35-pin connector. Check the connector for corrosion or damage, clean it if necessary, and re-insert it.

	SUB CODE	FAULT NAME *CAN OBJECT*	POSSIBLE CAUSE	SET CONDITIONS	CLEAR CONDITION	STEER FAULT ACTION	TRACTION FAULT ACTION
11	1	Hardware Fault *0x3800 0x02*	1. An internal hardware error has been detected; controller defective.	Hardware error detected.	Cycle KSI.	Shutdown.	1 = Stop.
12	1	Controller Overcurrent 1 *0x3800 0x0E*	1. External short of phase U, V, or W motor connection. 2. Controller defective.	Controller hardware detected overcurrent condition.	Cycle KSI.	Shutdown.	1 = Stop.
12	2	Controller Overcurrent 2 *0x3800 0x10*	1. External short of phase U, V, or W motor connection. 2. Motor parameters are mistuned. 3. Controller defective.	1. Phase current >120% of base current limit. 2. Phase current exceeded the current measurement limit.	Cycle KSI.	Shutdown.	1 = Stop.
13	1	Current Sensor Fault *0x3800 0x11*	1. Leakage to vehicle frame from phase U, V, or W (short in motor stator). 2. Controller defective.	Controller current sensors have invalid offset reading.	Cycle KSI.	Shutdown.	1 = Stop.
14	1	Precharge *0x3800 0x0C*	1. External load on capacitor bank (B+ connection terminal) that prevents the capacitor bank from charging. 2. Controller defective.	Capacitor bank voltage does not complete the charge to minimum of 75% of the keyswitch voltage.	Cycle KSI.	Shutdown.	1 = Stop.
15	1	Controller Severe Undertemp *0x3800 0x12*	1. Controller is operating in an extreme environment.	Controller heatsink temperature is equal to or below –40°C.	Bring heatsink temperature above –35°C.	Warning Only.	3 = No action.
16	1	Controller Severe Overtemp *0x3800 0x13*	1. Improper mounting of controller. 2. Excessive load on vehicle. 3. Controller is operating in an extreme environment.	Controller heatsink temperature is equal to or above 95°C.	Cycle KSI.	Warning then Shutdown.	1 = Stop.
17	1	Controller Severe Undervoltage *0x3800 0x14*	1. Battery or battery cables or battery connections defective. 2. Excessive non-controller system drain on battery. 3. Battery disconnected while driving. 4. Blown B+ fuse or steer contactor did not close.	1. Capacitor bank voltage (B+ terminal) less than 12V when Interlock = On. 2. Keyswitch voltage less than 12V.	Cycle KSI.	Shutdown.	1 = Stop.
18	1	Controller Severe Overvoltage *0x3800 0x15*	1. Battery or battery cable resistance too high for a given regen current. 2. Battery disconnected while regen braking.	Keyswitch or capacitor voltage (B+ terminal) greater than 65V.	Cycle KSI.	Shutdown.	1 = Stop.
22	1	Controller Overtemp *0x3800 0x16*	1. Improper mounting or cooling of controller. 2. Excessive load on vehicle. 3. Controller operating in an extreme environment.	Controller heatsink temperature is equal to or above 85°C.	Reduce heatsink temperature to < 85°C.	Warning Only.	2 = Reduce speed. (Max speed reduced linearly from 100% at 85°C to 0% at 95°C.)
25	1	5V Supply Failure *0x3800 0x03*	1. External load impedance on the +5V supply is too low.	5V supply is outside the 5V +/- 10% range.	Cycle KSI.	Hold then Shutdown.	1 = Stop.
26	1	10V Supply Failure 0x3800 0x2E	1. External load impedance on the +10V supply is too low.	10V supply is outside the 10V +/- 10% range.	Cycle KSI.	Warning then Shutdown.	1 = Stop.
27	1	Severe Motor Over Temp *0x3800 0x1C*	1. Motor is operating in an extreme environment. 2. Motor Temperature Control parameters are mistuned.	Sensor Enable = On and steer motor temperature > programmed Temperature Max.	Cycle KSI.	Warning then Shutdown.	1 = Stop.

FLASH CODE	SUB CODE	FAULT NAME *CAN OBJECT*	POSSIBLE CAUSE	SET CONDITIONS	CLEAR CONDITION	STEER FAULT ACTION	TRACTION FAULT ACTION
28	1	Motor Temp Hot Cutback *0x3800 0x18*	1. Motor is operating in an extreme environment. 2. Motor Temperature Control parameters are mistuned.	Sensor Enable = On and steer motor temperature > programmed Temperature Hot.	Steer motor temperature < programmed Temperature Hot.	Warning Only.	2 = Reduce speed. (Max speed reduced linearly from 100% at Temperature Hot to 0% at Temperature Max.)
29	1	Motor Temp Sensor Fault *0x3800 0x19*	1. Motor thermistor is not connected properly. 2. If the application does not use a motor thermistor, the Motor Temperature Sensor Enable parameter should be programmed Off.	Motor temperature input is at the voltage rail (0 or 5V).	Motor temp input within the normal operating range.	Warning Only.	2 = Reduce speed. (Max speed reduced to Sensor Fault Traction Cutback.)
31	1	Contactor Open/Short *0x3800 0x05*	1. Open or short on driver load. 2. Dirty connector pins. 3. Bad crimps or faulty wiring.	Steer contactor driver is either open or shorted. This fault is set only when Contactor Control Type = 1 and Checks Enable = On.	Cycle KSI.	Warning then Shutdown.	1 = Stop.
35	1	Fault Output Open/Short *0x3800 0x27*	1. External load impedance on the fault output is too low. 2. Controller defective.	The controller is unable to assert the fault output line: 1. The Fault Output = On and the fault output voltage is not within 5V of the KSI voltage. 2. The Fault Output = Off and the fault output voltage is greater than 80% of KSI voltage. 3. The Fault Output = On and the fault output voltage is less than 4V.	Cycle KSI.	Warning then Shutdown.	1 = Stop.
36	1	Motor Stalled *0x3800 0x21*	1. Stalled steer motor. 2. Steer motor encoder failure. 3. Bad crimps or faulty wiring. 4. Problems with power supply of the steer motor encoder.	The motor has been commanded to move at more than 25% of the Max Motor Speed or at more than 95% of the available motor current when the motor speed is less than the programmed Stall Speed for the programmed Stall Time.	Cycle KSI.	Warning then Shutdown.	1 = Stop.
37	1	Motor Open *0x3800 0x1A*	1. Motor phase is open. 2. Bad crimps or faulty motor cable wiring. 3. Controller defective.	1. After the steer contactor closes but before operation starts, the motor is checked for an open phase by running a DC current out of phase U and ensuring the current is measured back on both phase V and phase W. The fault is set if the check fails. 2. When the motor is running, one phase averages less than 1A while the other phases average more than 4A for 256 ms when the electrical frequency is greater than 1 Hz and has not changed sign.	Cycle KSI.	Warning then Shutdown.	1 = Stop.

7. TROUBLESHOOTING
Curtis 1222 Steering controller
ECOVOLVE

FLASH CODE	SUB CODE	FAULT NAME *CAN OBJECT*	POSSIBLE CAUSE	SET CONDITIONS	CLEAR CONDITION	STEER FAULT ACTION	TRACTION FAULT ACTION
38	1	Contactor Welded *0x3800 0x06*	1. Steer contactor tips are welded closed. 2. An alternative voltage path (such as an external precharge resistor) is providing a current to the capacitor bank (B+ terminal).	The steer contactor tips are shorted when the contactor is supposed to be open. This fault is set only when Contactor Control Type= 1 and Checks Enable= On. The weld check is done in Steer Contactor State= 3 (Opening) when DC current is applied to the motor. The fault will be set if the difference between the capacitor bank and keyswitch voltages does not exceed 2V.	Cycle KSI.	Shutdown.	1 = Stop.
39	1	Contactor Opened *0x3800 0x1D*	1. Steer contactor was closed temporarily, but then opened. 2. Steer contactor tips are oxidized. 3. An external load on the capacitor bank (B+ terminal) that prevents the bank from charging.	The steer contactor was closed, but detected open. This fault is set only when Contactor Control Type= 1 and Checks Enable= On. In Contactor State=2 (Closed), the fault will be set if the capacitor bank and keyswitch voltages differ by more than 5V.	Cycle KSI.	Warning then Shutdown.	1 = Stop.
39	2	Contactor Did Not Close *0x3800 0x07*	1. Steer contactor did not close. 2. Steer contactor tips are oxidized. 3. An external load on the capacitor bank (B+ terminal) that prevents the bank from charging.	The steer contactor did not close when commanded. This fault is set only when Contactor Control Type= 1 and Checks Enable= On. In Contactor State= 1 (Closing), the fault will be set if the capacitor bank and keyswitch voltages differ by more than 2V.	Cycle KSI.	Shutdown.	1 = Stop.
41	1	Command Analog1 Out of Range *0x3800 0x08*	1. Command input device's Analog 3 input (pin 8) is out of range.	Analog1 voltage >Analog1 Fault Max or Analog1 voltage <Analog1 Fault Min. The fault is checked only if Command Input Device= 0, 2, or 3.	Cycle KSI.	Hold then Shutdown.	1 = Stop.
42	1	Command Analog3 Out of Range *0x3800 0x09*	1. Command input device's Analog 3 input (pin 19) is out of range.	Analog3 voltage >Analog3 Fault Max or Analog3 voltage <Analog3 Fault Min. The fault is checked only if Command Input Device= 0, 2, or 3.	Cycle KSI.	Hold then Shutdown.	1 = Stop.
43	1	Feedback Analog5 Out of Range *0x3800 0x0A*	1. Position feedback device's Analog 5 input (pin 16) is out of range.	Analog5 voltage >Analog5 Fault Max or Analog5 voltage <Analog5 Fault Min. The fault is checked only if Position Feedback Device= 0, 2, or 3.	Cycle KSI.	Hold then Shutdown.	1 = Stop.
44	1	Feedback Analog6 Out of Range *0x3800 0x0B*	1. Position feedback device's Analog 6 input (pin 17) is out of range.	Analog6 voltage >Analog6 Fault Max or Analog6 voltage <Analog6 Fault Min. The fault is checked only if Position Feedback Device = 0, 2, or 3.	Cycle KSI.	Hold then Shutdown.	1 = Stop.

FLASH CODE	SUB CODE	FAULT NAME *CAN OBJECT*	POSSIBLE CAUSE	SET CONDITIONS	CLEAR CONDITION	STEER FAULT ACTION	TRACTION FAULT ACTION
45	1	CAN Not Operational *0x3800 0x32*	1. 1222 CAN NMT State did not go operational within 80 ms of interlock being applied.	This check is made only when the parameter CAN Required = On. With Interlock = On for 80 ms, the CAN NMT State is < > Operational.	Cycle KSI.	Warning and drop fault output.	1 = Stop.
46	1	EEPROM CRC Fault *0x3800 0x1B*	1. New software loaded into EEPROM memory. 2. Try using function "Restore to Factory Defaults" to clear fault. 3. Controller defective.	Error in EEPROM CRC calculation.	Cycle KSI.	Shutdown.	1 = Stop.
47	1	Sin/Cos Command Sensor *0x3800 0x17*	1. Sin/Cos Sensor defective. 2. Sin/Cos Sensor parameters are mistuned.	The Analog 1 and Analog 3 inputs do not match the expected sine and cosine signals. They must be within the Command Input Sin/Cos sensor parameter Tolerance volts of the ideal waveform as defined by the Amplitude and Offset parameters. This fault is also set if the Sin/Cos sensor signals are < Fault Min or > Fault Max parameters.	Cycle KSI.	Hold then Shutdown.	1 = Stop.
47	2	Sawtooth Command Sensor *0x3800 0x30*	1. Sawtooth Sensor defective. 2. Sawtooth Sensor parameters are mistuned.	The Analog 1 and Analog 3 inputs do not match the expected sawtooth waveform. They must be within the parameter Command Device »3-Sawtooth Sensor» Tolerance of the ideal 180° offset: ABS(ABS(Analog1-Analog3)-0.5*(MaxVolts+MinVolts)) > Sawtooth Tolerance for 60 ms.	Cycle KSI.	Hold then Shutdown.	1 = Stop.
48	1	Sin/Cos Feedback Sensor *0x3800 0x25*	1. Sin/Cos Sensor defective. 2. Sin/Cos Sensor parameters are mistuned.	The Analog 5 and Analog 6 inputs do not match the expected sine and cosine signals. They must be within the Position Feedback Sin/Cos sensor parameter Tolerance volts of the ideal waveform as defined by the Amplitude and Offset parameters. This fault is also set if the Sin/Cos sensor signals are < Fault Min or > Fault Max parameters.	Cycle KSI.	Hold then Shutdown.	1 = Stop.
48	2	Sawtooth Feedback Sensor *0x3800 0x31*	1. Sawtooth Sensor defective. 2. Sawtooth Sensor parameters are mistuned.	The Analog 5 and Analog 6 inputs do not match the expected sawtooth waveform. They must be within the parameter Feedback Device »3-Sawtooth Sensor» Tolerance of the ideal 180° offset: ABS(ABS(Analog5-Analog6)-0.5*(MaxVolts+MinVolts)) > Sawtooth Tolerance for 60 ms.	Cycle KSI.	Hold then Shutdown.	1 = Stop.

7. TROUBLESHOOTING
Curtis 1222 Steering controller
ECOVOLVE

FLASH CODE	SUB CODE	FAULT NAME *CAN OBJECT*	POSSIBLE CAUSE	SET CONDITIONS	CLEAR CONDITION	STEER FAULT ACTION	TRACTION FAULT ACTION
49	1	Parameter Change Fault *0x3800 0x0D*	1. A parameter value or the software was changed that required a power cycle. 2. This fault is set automatically to force the vehicle operator to cycle power, for safety purposes.	1. A parameter was changed that requires a power cycle. See PCF column in Sec. 3 (Programmable Parameter Menus) to identify the parameters that will cause a parameter change fault. 2. A new software application was loaded that caused the parameter values to be overwritten, requiring a power cycle. 3. A device using the serial interface (such as the 1313) is requesting an out-of-range parameter change.	Cycle KSI.	Shutdown.	1 = Stop.
51	1	Interlock Switch *0x3800 0x20*	1. When the interlock switch inputs are a crossed configuration (N.O. and N.C.), the two inputs are checked. A fault is set if Switch 1 (pin 9) = Switch 3 (pin 11). 2. Interlock switch defective.	Interlock Input 1 = Interlock Input 3. The fault is checked only when Interlock Type= 2 (crossed polarity).	Interlock Input 1 <> Interlock Input 3.	Interlock= Off.	1 = Stop.
52	1	Home Switch Supervision *0x3800 0x1F*	1. When the wheel position is outside the Home Switch Tolerance, the primary and supervisory home switch inputs are checked and fault 52 is set if they disagree. 2. Home switch is defective 3. For 360° steering, the parameter Homing Cam Angle (deg) is not set correctly.	1. Homing Input Type = 1 (crossed polarity) and Switch2 = Switch4 and the position from home is > Home Switch Tolerance. 2. Homing Input Type = 2 (same polarity) and Switch2 ≠ Switch4 and the position from home is > Home Switch Tolerance.	Cycle KSI.	Warning then Shutdown.	1 = Stop.
53	1	Home Position Not Found *0x3800 0x23*	1. Home switch defective.	During homing (Steer Command State= 2), the home position was not found after traveling 180° (360° in the case of 360° steering) or within the programmed Homing Timeout time.	Cycle KSI.	Shutdown.	1 = Stop.
54	1	Home Reference Tolerance Fault *0x3800 0x24*	1. The parameter Home Switch Tolerance (deg) is not set correctly. 2. Home switch defective. 3. For 360° degree steering, the parameter Homing Cam Angle (deg) is not set correctly.	During steering (Steer Command State = 4), the wheel position at which a home event occurred is greater than the parameter Home Switch Tolerance allows.	Cycle KSI.	Warning then Shutdown.	1 = Stop.
55	1	Steer Command Supervision *0x3800 0x21*	1. Command input device defective.	Steer Command differs from Steer Command2 by more than the programmed Steer Command Tolerance. These command signals are checked by both the main and supervisor processors if the Device State=5 (Operation Enabled). Note: This check is not performed if Supervision Input Device = 5.	Cycle KSI.	Hold then Shutdown.	1 = Stop.

FLASH CODE	SUB CODE	FAULT NAME *CAN OBJECT*	POSSIBLE CAUSE	SET CONDITIONS	CLEAR CONDITION	STEER FAULT ACTION	TRACTION FAULT ACTION
56	1	Wheel Position Supervision *0x3800 0x22*	1. Position feedback device defective.	1. Wheel Position differs from Wheel Position2 by more than the Wheel Position Tolerance for 80 ms. These feedback signals are checked by both the main and supervisor processors if the Device State= 5 (Operation Enabled). 2. Wheel Position differs from Encoder3 Position by more than the Encoder Position Tolerance. These feedback signals are checked by only the main processor if the Device State= 5 (Operation Enabled). Note: This check is not performed if Supervision Feedback Device = 4.	Cycle KSI.	Hold then Shutdown.	1 = Stop.
69	1	5V Current Out of Range *0x3800 0x0F*	1. The external load on the 5V supply is drawing either too much or too little current.	The measured current of the +5V supply (pins 21 and 34) is less than the parameter 5V Current Min or greater than the parameter 5V Current Max.	Cycle KSI.	Hold then Shutdown.	1 = Stop.
71	1	Software Fault 1 *0x3800 0x01*	1. Reserved for future use.	—	—	—	—
71	2	Software Fault 2 *0x3800 0x2A*	1. Software defective. 2. Controller defective.	1. Unexpected software value. 2. Failure to send a CAN SDO message response.	Cycle KSI.	Shutdown.	1 = Stop.
71	3	Software Fault 3 *0x3800 0x2B*	1. Reserved for future use.	—	—	—	—
71	4	Software Fault 4 *0x3800 0x2C*	1. Software defective. 2. Controller defective.	Task overrun.	Cycle KSI.	Shutdown.	1 = Stop.
71	5	Software Fault 5 0x3800 0x28	1. Software defective. 2. Controller defective.	An internal micro-to-micro communication error.	Cycle KSI.	Shutdown.	1 = Stop.
72	1	PDO1 Timeout *0x3800 0x29*	1. Communication between the traction controller and the 1222 has halted.	Time between PDO1 messages received exceeds the PDO1 TimeoutTime.	Cycle KSI.	Warning then Shutdown.	1 = Stop.
72	2	PDO2 Timeout 0x3800 0x33	1. Communication from the CAN device sending the PDO2 message to the 1222 has halted.	Time between PDO2 messages received exceeds the PDO2 TimeoutTime.	Cycle KSI.	Warning then Shutdown.	1 = Stop.
72	3	PDO3 Timeout *0x3800 0x34*	1. Communication from the CAN device sending the PDO3 message to the 1222 has halted.	Time between PDO3 messages received exceeds the PDO3 TimeoutTime.	Cycle KSI.	Warning then Shutdown.	1 = Stop.
72	4	PDO4 Timeout *0x3800 0x35*	1. Communication from the CAN device sending the PDO4 message to the 1222 has halted.	Time between PDO4 messages received exceeds the PDO4 TimeoutTime.	Cycle KSI.	Warning then Shutdown.	1 = Stop.

7. TROUBLESHOOTING
Curtis 1222 Steering controller
ECOVOLVE

FLASH CODE	SUB CODE	FAULT NAME *CAN OBJECT*	POSSIBLE CAUSE	SET CONDITIONS	CLEAR CONDITION	STEER FAULT ACTION	TRACTION FAULT ACTION
73	1	Following Error *0x3800 0x1E*	1. Position feedback device defective. 2. Steer motor stalled. 3. Steer motor encoder failed.	This fault is checked by the main micro only when the Steering Command State= 4 (Steering). A fault is set if the Error Tolerance (deg) is exceeded *and* the steered wheel is not moving in the right direction with a Wheel Speed (deg/s) equal to or greater than the Speed Tolerance (deg/s) for longer than the Following Error Time.	Cycle KSI.	Warning then Shutdown.	1 = Stop.
74	1	Hardware Software Mismatch *0x3800 0x26*	1. New software loaded. 2. Controller hardware cannot use the loaded software.	1. The software is not compatible with the controller hardware. 2. The software loaded into either or both microprocessors in incorrect.	Cycle KSI.	Shutdown.	1 = Stop.
75	1	Parameter Conflict *0x3800 0x04*	1. Parameter settings are in conflict with each other. 2. Parameter setting out of range.	1. Command Input Device = 1 and Vehicle Configuration » Traction Speed Input » Input Type = 1. 2. Vehicle Configuration » Nominal Voltage is out of range (24–48 V). 3. Motor Control Tuning » Motor Type is out of range (0–41). 4. Motor » Temperature Control » Sensor Type is out of range (0–5). 5. Command Input Device » 0-Analog1 and 3 » Analog1 Left, Center, and Right must be in ascending or descending order. 6. Command Input Device » 0-Analog1 and 3 » Analog3 Left, Center, and Right must be in ascending or descending order. 7. Feedback Device » 0-Analog5 and 6 » Analog5 Left Stop, Center, and Right Stop must be in ascending or descending order. 8. Feedback Device » 0-Analog5 and 6 » Analog6 Left Stop, Center, and Right Stop must be in ascending or descending order. 9. Command Device » Command Map » Left Stop (deg) or Right Stop (deg)= 0.	Cycle KSI.	Shutdown.	1 = Stop.

Rear drive unit troubleshooting

Rotary bearing

Under normal circumstances this bearing must be greased once at year.

At every unit cleaning with vapour or other mean, the bearing has to be greased again.

In case of operation of the unit in dusty or in damp environment,
the greasing of the bearing must be executed more times a month.

Kind of grease: ***ESSO BEACON EP2***

DEFECTS	***POSSIBLE CAUSES***	***REMEDIES***
Noise In speed	Gear damaged during assembly of the engine.	Disassemble the electric motor, check the damages of the gear
Buzzing	Engine connection not correct. Defective engine bearing.	Check the connection. Check the bearing.
Engine	Defective seal ring of the electric motor.	Disassemble the engine and check the seal ring surface
Wheel shaft	Defective wheel shaft gasket.	Check the wheel shaft gasket and check possible damages in the sealing area.
Overheating of the drive	The oil level is too high or too low.	Check the oil level.